THE BUFFALO AND FORT ERIE PUBLIC BRIDGE AUTHORITY

PIER RESEALING WITH MISCELLANEOUS CONCRETE REPAIRS

FOR

PEACE BRIDGE OVER THE NIAGARA RIVER

BIN 5516290

MAY 2021

PREPARED BY:

WSP USA Inc.
50 Lakefront Blvd.
Suite 111
Buffalo, NY 14202
(716) 853-1220

LICENSED PROFESSIONAL ENGINEER
K. J. YUSEK
100179098
PROVINCE OF ONTARIO

FILE NAME:

THESE DESIGN DOCUMENTS ARE PREPARED SOLELY FOR THE USE BY THE PARTY WITH WHOM THE DESIGN PROFESSIONAL HAS ENTERED INTO A CONTRACT AND THERE ARE NO REPRESENTATIONS OF ANY KIND MADE BY THE DESIGN PROFESSIONAL TO ANY PARTY WITH WHOM THE DESIGN PROFESSIONAL HAS NOT ENTERED INTO A CONTRACT

No.	Revisions	Date	By	No.	Revisions Cont.	Date	By

BUFFALO AND FORT ERIE PUBLIC BRIDGE AUTHORITY

BUFFALO AND FORT ERIE PUBLIC BRIDGE AUTHORITY
100 QUEEN STREET
FORT ERIE, ON L2A 3S6 CANADA

50 Lakefront Boulevard
Suite 111
Buffalo, NY 14202

STATE OF NEW YORK
DAVID F. DOMENICO
093613
LICENSED PROFESSIONAL ENGINEER
02/25/2021

BUFFALO AND FORT ERIE PUBLIC BRIDGE AUTHORITY GEC 2020-2023
BRIDGE PIER REHABILITATION

COVER

Designed:	RLL	Drawn:	KLW	Checked:	SFD	Date:	01-22-2021

Project No:	30900145
WBS:	30900145
Sheet No.	1 OF 37
Dwg. No.	G-001

INCEX OF DRAWINGS		
SHEET NUMBER	SHEET TITLE	DRAWING TITLE
1	G-001	COVER
2	G-002	INDEX OF DRAWINGS, SYMBOLS AND ABBREVIATIONS
3	G-003	ESTIMATE OF QUANTITIES
4	G-004	GENERAL NOTES (1 OF 2)
5	G-005	GENERAL NOTES (2 OF 2)
6	G-006	GENERAL PLAN & ELEVATION (1 OF 2)
7	G-007	GENERAL PLAN & ELEVATION (2 OF 2)
8	S-001	CONCRETE PIER SURFACE REPAIR NOTES
9	S-002	CONCRETE PIER SURFACE REPAIR TYPICAL DETAILS
10	S-003	LIMITS OF SEALING
11	S-100	PIER B – PLAN, EAST & NORTH ELEVATIONS
12	S-101	PIER B – WEST & SOUTH ELEVATIONS
13	S-102	PIER A – PLAN, EAST & NORTH ELEVATIONS
14	S-103	PIER A – WEST & SOUTH ELEVATIONS
15	S-104	PIER 1 – PLAN, EAST & NORTH ELEVATIONS
16	S-105	PIER 1 – WEST & SOUTH ELEVATIONS
17	S-106	PIER 2 – PLAN
18	S-107	PIER 2 – EAST ELEVATION
19	S-108	PIER 2 – WEST ELEVATION
20	S-109	PIER 2 – NORTH & SOUTH ELEVATIONS
21	S-110	PIER 3 – PLAN
22	S-111	PIER 3 – EAST ELEVATION
23	S-112	PIER 3 – WEST ELEVATION
24	S-113	PIER 3 – NORTH & SOUTH ELEVATIONS
25	S-114	PIER 4 – PLAN
26	S-115	PIER 4 – EAST ELEVATION
27	S-116	PIER 4 – WEST ELEVATION
28	S-117	PIER 4 – NORTH & SOUTH ELEVATIONS
29	S-118	PIER 5 – PLAN
30	S-119	PIER 5 – EAST ELEVATION
31	S-120	PIER 5 – WEST ELEVATION
32	S-121	PIER 5 – NORTH & SOUTH ELEVATIONS
33	S-122	PIER 6 – PLAN
34	S-123	PIER 6 – EAST ELEVATION
35	S-124	PIER 6 – WEST ELEVATION
36	S-125	PIER 6 – NORTH & SOUTH ELEVATIONS
37	S-126	PIER 7 – PLAN, EAST & WEST ELEVATION
38	S-127	PIER 7 – NORTH & SOUTH ELEVATIONS

FILE NAME:

THESE DESIGN DOCUMENTS ARE PREPARED SOLELY FOR THE USE BY THE PARTY WITH WHOM THE DESIGN PROFESSIONAL HAS ENTERED INTO A CONTRACT AND THERE ARE NO REPRESENTATIONS OF ANY KIND MADE BY THE DESIGN PROFESSIONAL TO ANY PARTY WITH WHOM THE DESIGN PROFESSIONAL HAS NOT ENTERED INTO A CONTRACT

No.	Revisions	Date	By

No.	Revisions Cont.	Date	By

BUFFALO AND FORT ERIE PUBLIC BRIDGE AUTHORITY
BUFFALO AND FORT ERIE PUBLIC BRIDGE AUTHORITY
100 QUEEN STREET
FORT ERIE, ON L2A 3S6 CANADA

wsp
50 Lakefront Boulevard
Suite 111
Buffalo, NY 14202

K. L. YUSEK
100179098
02/25/2021

BUFFALO AND FORT ERIE PUBLIC BRIDGE AUTHORITY GEC 2020-2023
BRIDGE PIER REHABILITATION

INDEX OF DRAWINGS, SYMBOLS AND ABBREVIATIONS

Designed: RLL | Drawn: KLW | Checked: SFD | Date: 01-22-2021

Project No:	30900145
WBS:	30900145
Sheet No.	2 OF 37
Dwg. No.	G-002

GENERAL

1. THE OWNER OF THE WORK FOR THIS CONTRACT IS THE BUFFALO FORT ERIE PUBLIC BRIDGE AUTHORITY, HEREAFTER REFERRED TO AS THE AUTHORITY.

2. THE CONTRACTOR SHALL CONDUCT THE WORK IN A MANNER THAT WILL ENSURE, AS FAR AS PRACTICABLE, THE LEAST OBSTRUCTION TO TRAFFIC AND SHALL PROVIDE FOR THE CONVENIENCE AND SAFETY OF THE GENERAL PUBLIC AND VISITORS, ALONG AND ADJACENT TO THE CONSTRUCTION AREA, IN AN ADEQUATE AND SATISFACTORY MANNER. THE AUTHORITY SHALL REVIEW AND APPROVE ALL CONTRACTOR MEANS AND METHODS AND SCHEDULE THAT COULD AFFECT TRAFFIC THROUGHPUT ON THE BRIDGE, BRIDGE APPROACHES, PLAZAS, UNDERLYING ROADWAYS AND THE BLACK ROCK CANAL.

3. THE CONTRACTOR SHALL BE RESPONSIBLE FOR INITIATING, MAINTAINING, AND SUPERVISING ALL SAFETY PRECAUTIONS AND PROGRAMS IN CONNECTION WITH THE WORK. THE CONTRACTOR IS RESPONSIBLE FOR ENSURING THAT THIS PROJECT AND RELATED WORK COMPLIES WITH ALL APPLICABLE MUNICIPAL, STATE, PROVINCIAL AND FEDERAL SAFETY CODES AND REGULATIONS GOVERNING THIS WORK.

4. ALL MATERIALS, FABRICATION AND CONSTRUCTION SHALL BE IN ACCORDANCE WITH THE MOST CURRENT NEW YORK DEPARTMENT OF TRANSPORTATION (NYSDOT) STANDARD SPECIFICATIONS WITH UPDATES AND AS SUPPLEMENTED BY THE TECHNICAL PROVISIONS OF THE CONTRACT DOCUMENTS.

5. ALL WORK PRESENTED ON THESE DRAWINGS MUST BE COMPLETED BY THE CONTRACTOR UNLESS NOTED OTHERWISE. THE CONTRACTOR MUST HAVE CONSIDERABLE EXPERIENCE IN PERFORMANCE OF WORK SIMILAR TO THAT DESCRIBED HEREIN. BY ACCEPTANCE OF THIS ASSIGNMENT, THE CONTRACTOR IS ATTESTING THAT HE DOES HAVE SUFFICIENT EXPERIENCE AND ABILITY, THAT HE IS KNOWLEDGEABLE OF THE WORK TO BE PERFORMED AND THAT HE IS PROPERLY LICENSED AND PROPERLY REGISTERED TO DO THIS WORK IN THE PROVINCE OF ONTARIO (CANADA) OR NEW YORK STATE (UNITED STATES) AS APPLICABLE.

6. THE CONTRACTOR SHALL VISIT THE SITE BEFORE BIDDING TO BECOME FAMILIAR WITH THE PRESENT FIELD CONDITIONS AND TO JUDGE THE EXTENT AND NATURE OF THE WORK TO BE DONE UNDER THIS CONTRACT. NO EXTRA COMPENSATION WILL BE CONSIDERED BECAUSE OF FAILURE TO INCLUDE IN THE BID ALL ITEMS AND MATERIALS WHICH ARE REQUIRED IN ACCORDANCE WITH THE CONTRACT DOCUMENTS.

7. ALL DIMENSIONS, ELEVATIONS, AND EXISTING CONDITIONS SHOWN ON THE DRAWINGS SHALL BE FIELD VERIFIED BY THE CONTRACTOR PRIOR TO BEGINNING ANY MATERIALS ORDERING, FABRICATION, OR CONSTRUCTION WORK ON THIS PROJECT. CONTRACTOR SHALL NOT SCALE CONTRACT DRAWINGS IN LIEU OF FIELD VERIFICATION. ANY DISCREPANCIES SHALL BE IMMEDIATELY BROUGHT TO THE ATTENTION OF THE ENGINEER OF RECORD. THE DISCREPANCIES MUST BE RESOLVED BEFORE THE CONTRACTOR IS TO PROCEED WITH THE WORK.

8. THE OWNER RETAINS THE ABILITY TO REMOVE BID ITEMS FROM THE PROJECT AFTER CONTRACT HAS BEEN AWARDED TO THE CONTRACTOR PRIOR TO THE CONTRACTOR COMMENCING WORK ON THE SUBJECT BID ITEM.

9. THE CONTRACT DOCUMENTS DO NOT INDICATE THE METHOD OF CONSTRUCTION. THE CONTRACTOR SHALL SUPERVISE AND DIRECT THE WORK AND SHALL BE SOLELY RESPONSIBLE FOR ALL CONSTRUCTION MEANS, METHODS, TECHNIQUES, SEQUENCES, AND PROCEDURES. OBSERVATION VISITS TO THE SITE BY THE ENGINEER WILL NOT INCLUDE INSPECTION OF THE PROTECTIVE MEASURES OR THE PROCEDURES. THE AUTHORITY MAY CONDUCT SITE INSPECTIONS AT THEIR DISCRETION WITHOUT PRIOR NOTICE. THE CONTRACTOR SHALL CONFORM TO SITE SAFETY REQUIREMENTS AND TO ANY DIRECTION FROM THE AUTHORITY RESULTING FROM A SITE INSPECTION. THE CONTRACTOR SHALL PROVIDE A COMPETENT PERSON THAT WILL BE RESPONSIBLE FOR SAFETY.

10. ALL MATERIALS AND EQUIPMENT FURNISHED SHALL BE NEW AND OF GOOD QUALITY, FREE FROM FAULTS AND DEFECTS AND IN CONFORMANCE WITH THE CONTRACT DOCUMENTS.

11. WHERE PRODUCTS ARE NAMED FOR USE WITHIN THE CONTRACT DOCUMENTS, A REQUEST FOR SUBSTITUTION CAN BE MADE, UNLESS EXPLICITLY STATED OTHERWISE. EQUAL OR BETTER SUBSTITUTIONS WILL BE CONSIDERED. ANY AND ALL SUBSTITUTIONS MUST BE PROPERLY AUTHORIZED IN WRITING BY THE AUTHORITY AND ENGINEER PRIOR TO INSTALLATION.

12. PART NUMBERS LISTED ON CONSTRUCTION DRAWINGS ARE INTENDED TO AID THE CONTRACTOR. CONTRACTOR SHALL VERIFY PARTS AND QUANTITIES WITH MANUFACTURER PRIOR TO BIDDING AND/OR ORDERING MATERIALS.

13. REFER TO SPECIFICATIONS FOR INFORMATION REGARDING WARRANTY OF ALL MATERIALS AND WORKMANSHIP.

14. THE CONTRACTOR SHALL PERFORM ALL WORK WITH CARE SO THAT ANY MATERIALS WHICH ARE TO REMAIN IN PLACE, OR THAT ARE TO REMAIN THE PROPERTY OF THE AUTHORITY, WILL NOT BE DAMAGED. ANY DAMAGED SURFACES/MATERIALS, INCLUDING EXISTING PAINT SYSTEM ON THE STRUCTURAL STEEL, SHALL BE REPAIRED OR REPLACED IN A MANNER SATISFACTORY TO THE ENGINEER, AT THE CONTRACTOR'S EXPENSE. ALL EXISTING MATERIALS SHALL BE PROTECTED FROM DAMAGE AND SHALL BE CLEANED OF CONCRETE AND OTHER MATERIALS RESULTING FROM THE CONTRACTOR'S ACTIVITIES. THE CONTRACTOR SHALL CLEAN ALL BRIDGE ELEMENTS OF DEBRIS AND OTHER MATERIAL CAUSED BY THEIR OPERATIONS TO THE SATISFACTION OF THE ENGINEER.

15. THE CONTRACTOR SHALL BE RESPONSIBLE FOR PROTECTING THE EXISTING FEATURE LIGHTING INSTALLATIONS ON THE BRIDGE. ANY DAMAGE RESULTING FROM THE CONTRACTOR'S OPERATIONS SHALL BE REPAIRED AT CONTRACTOR'S EXPENSE.

16. ALL AREAS OUTSIDE THE LIMITS OF WORK DISTURBED BY THE CONTRACTOR'S OPERATIONS SHALL BE RESTORED TO ORIGINAL CONDITION BY THE CONTRACTOR AT NO ADDITIONAL COST TO THE OWNER.

17. THE CONTRACTOR SHALL RESTORE ANY DISRUPTED AREAS AND LANDSCAPING TO THEIR ORIGINAL STATE. COSTS ASSOCIATED WITH THIS WORK SHALL BE INCLUDED IN THE BID PRICE.

18. THE COST OF FURNISHING, INSTALLING, MAINTAINING. REMOVING, AND DISPOSING OF ALL PLATFORMS, NETS, SCREENS. OR OTHER PROTECTIVE DEVICES SHALL BE INCLUDED IN THE UNIT BID PRICE OF THE APPROPRIATE ITEMS OF WORK.

19. ALL MATERIALS INSTALLED OR RE-INSTALLED AS PART OF THIS WORK SHALL BE INSTALLED WITH NEW HARDWARE.

20. THE CONTRACTOR SHALL BE RESPONSIBLE FOR MATCHING THE COLOR AND GENERAL APPEARANCE OF THE REPAIRED CONCRETE AREAS TO THE ADJACENT CONCRETE AS MUCH AS PRACTICABLE, SUBJECT TO APPROVAL BY THE ENGINEER AND THE AUTHORITY.

21. CONTRACTOR SHALL BE RESPONSIBLE FOR ACCESS, SHORING, FORMWORK AND TEMPORARY SUPPORTS TO BE IN COMPLIANCE WITH OSHA REGULATIONS.

22. CONTRACTOR IS RESPONSIBLE FOR PROVIDING FENCING AND GATE MATERIALS AS REQUIRED TO SECURE STAGING AREAS.

23. REFER TO THE BID PACKAGE FOR OTHER WORK RESTRICTIONS.

24. CONSTRUCTION EQUIPMENT TO BE USED ON THE BRIDGE DECK, SIDEWALKS, AND APPROACHES IS SUBJECT TO APPROVAL BY THE OWNER DUE TO LOAD RESTRICTIONS ON THE BRIDGE AND PEDESTRIAN CONSIDERATIONS. CONTRACTOR IS RESPONSIBLE FOR GAINING APPROVAL PRIOR TO BEGINNING WORK. CONTRACTOR SHALL SUBMIT DOCUMENTATION SEALED BY A REGISTERED PROFESSIONAL ENGINEER CERTIFYING THAT THE PROPOSED CONSTRUCTION EQUIPMENT AND MATERIALS DO NOT EXCEED HS-20 LOADING.

QUANTITIES

1. THE QUANTITIES SHOWN IN THE SUMMARY OF QUANTITIES ARE APPROXIMATE ONLY. THERE SHALL BE NO CLAIM AGAINST THE AUTHORITY MADE BY THE CONTRACTOR FOR WORK PERTAINING TO MODIFICATIONS, AS MAY BE REQUIRED, DUE TO ANY DIFFERENCE BETWEEN ACTUAL FIELD CONDITIONS AND THOSE SHOWN BY THE DETAIL AND DIMENSIONS ON THE CONTRACT PLANS. FINAL PAYMENT SHALL BE MADE FOR THE ACTUAL QUANTITIES THAT ARE INCORPORATED OR MADE NECESSARY BY THE WORK COVERED BY THE CONTRACT.

UTILITIES

1. THE CONTRACTOR SHALL BE RESPONSIBLE FOR THE MAINTENANCE OF ALL EXISTING UTILITIES AFFECTED BY THEIR WORK FOR THE DURATION OF THE CONTRACT.

2. THE CONTRACTOR IS ADVISED THAT THE PEACE BRIDGE CARRIES MAJOR COMMUNICATION UTILITIES UNDER THE BRIDGE DECK. THE CONTRACTOR SHALL TAKE CARE NOT TO DISTURB THESE UTILITIES. IT IS THE CONTRACTORS RESPONSIBILITY TO CONTACT THE APPROPRIATE UTILITY COMPANY PRIOR TO PERFORMING ANY WORK WHICH, IN THE CONTRACTOR'S OPINION OR ENGINEER'S OPINION, WILL JEOPARDIZE THE UTILITIES. THE CONTRACTOR WILL BE SOLELY RESPONSIBLE FOR ANY DAMAGE OCCURRING TO THESE UTILITIES.

NAVIGABLE WATERWAY

1. THE CONTRACTOR SHALL NOT OBSTRUCT NAVIGATION AND SHALL NOT RESTRICT THE NAVIGATION CLEARANCE OVER THE NIAGARA RIVER OR BLACK ROCK CANAL. ALL WORK SHALL BE DONE IN ACCORDANCE WITH THE APPROPRIATE GOVERNMENT AGENCIES HAVING REGULATORY AUTHORITY OVER THE WATERWAY.

MAINTENANCE AND PROTECTION OF TRAFFIC

1. PROTECTION OF THE PUBLIC: THE CONTRACTOR SHALL MAINTAIN AND PROTECT ALL TRAFFIC IN ACCORDANCE WITH THE MAINTENANCE AND PROTECTION OF TRAFFIC PLANS AND PROVISIONS OF THE PROJECT SPECIFICATIONS, AS DIRECTED BY THE ENGINEER AND AS REQUIRED BY THE AUTHORITY.

2. THE CONTRACTOR SHALL COORDINATE THEIR MAINTENANCE AND PROTECTION OF TRAFFIC ACTIVITIES AND ACCESS NEEDS WITH THE AUTHORITY.

3. LANE CLOSURES REQUIRE PRIOR COORDINATION BETWEEN THE AUTHORITY AND THE CONTRACTOR. THE CLOSING OF LANES WILL ONLY BE PERMITTED WHEN DEEMED NECESSARY BY THE CONTRACTOR'S ACTIVITIES, AS APPROVED BY THE ENGINEER, AND AVOIDED OTHERWISE.

4. NO LONG TERM LANE CLOSURES SHALL BE PERMITTED AT ANY TIME DURING THE PERIODS FROM JUNE 01, 2021 TO SEPTEMBER 30, 2021, UNLESS PRIOR APPROVAL IS GIVEN BY THE AUTHORITY.

5. ALL VEHICLES, EQUIPMENT, CONSTRUCTION WORKERS AND THEIR ACTIVITIES ARE RESTRICTED AT ALL TIMES TO THE WORK AREAS AS SHOWN IN THE PLANS. THE CONTRACTOR SHALL, AT NO TIME, ALLOW THEIR EMPLOYEE'S VEHICLES TO BE PARKED ON THE BRIDGE OR TOLL PLAZAS.

6. OVERHEAD LANE CONTROL DEVICES WILL BE USED BY THE AUTHORITY FOR LANE CLOSURES AND DIRECTION DELINEATION.

7. BARRICADES, VERTICAL PANEL DELINEATORS AND FLASHING WARNING LIGHTS SHALL CONFORM TO THE MUTCD AND NEW YORK STATE DEPARTMENT OF TRANSPORTATION TRAFFIC AND SAFETY DIVISIONS.

8. PEDESTRIAN AND BICYCLE ACCESS SHALL BE MAINTAINED ON BOTH THE NORTH AND SOUTH WALKWAYS AT ALL TIMES DURING CONSTRUCTION UNLESS PRIOR APPROVAL IS GIVEN BY THE AUTHORITY.

OTHER FACILITIES

1. CONSTRUCTION ACTIVITIES AFFECTING OTHER TRANSPORTATION FACILITY OWNERS, INCLUDING THE USE OF DETOURS, SHALL BE PERFORMED IN ACCORDANCE WITH THE SPECIFICATIONS AND REQUIREMENTS OF THE AGENCY HAVING JURISDICTION. THE CONTRACTOR SHALL BE RESPONSIBLE FOR, OBTAINING AND PURCHASING ALL REQUIRED PERMITS, LICENSES, GOVERNMENT FEES AND CERTIFICATES OF INSPECTION.

2. THE CONTRACTOR IS RESPONSIBLE FOR THE SAFE REMOVAL AND DISPOSAL OF ALL DEBRIS FROM THE SITE IN A TIMELY MANNER.

3. ACCESS TO AND USE OF THE BLACK ROCK CANAL AND BIRD ISLAND PIER REQUIRES THE PERMISSION OF THE U.S. ARMY CORPS OF ENGINEERS:
   3.1. CONTACT: USACE BUFFALO DISTRICT REGULATORY OFFICE
   1-800-833-6390

4. FOR ACCESS TO AND USE OF THE NEW YORK STATE THRUWAY AUTHORITY RIGHT-OF-WAY:
   4.1. CONTACT: DIVISION PERMIT COORDINATOR
   PHONE: (716) 635-6253

5. FOR ACCESS TO, USE OF AND WORK OVER THE CSX TRANSPORTATION RIGHT-OF-WAY:
   5.1. CONTACT: CSX PROPRTY PORTAL WEBSITE
   OR CORRIDOR_DEVELOPMENT@CSX.COM

6. FOR ACCESS TO AND USE OF THE CITY OF BUFFALO RIGHT-OF-WAY:
   6.1. CONTACT: COMMISSIONER OF PUBLIC WORKS (716) 851-5636

7. FOR ACCESS TO AND USE OF NIAGARA PARKS COMMISSION RIGHT-OF-WAY:
   7.1. CONTACT: (877) 642-7275

8. ACCESS TO AND USE OF BLACK ROCK CANAL AND NIAGARA RIVER REQUIRES THE PERMISSION OF THE U.S. COAST GUARD.
   8.1. CONTACT: COAST GUARD SECTOR BUFFALO
   (716) 843-9315

9. THE CONTRACTOR SHALL COORDINATE ALL WORK ACTIVITIES, WHERE APPLICABLE, WITH ADJACENT CONTRACTORS OR ON-GOING WORK OPERATIONS. THIS SHALL INCLUDE, BUT IS NOT LIMITED TO, ANNUAL BRIDGE INSPECTION, AUTHORITY MAINTENANCE, FEATURE LIGHTING CONTRACTOR, PAINTING CONTRACT AND REPAIR WORK OR OTHER ACTIVITIES.

COORDINATION WITH RAILROAD

1. THE CONTRACTOR'S ATTENTION IS DIRECTED TO "WORK AFFECTING RAILROADS" OF THE GENERAL PROVISIONS.

2. ANY SCAFFOLDING OR PROTECTIVE MEASURE HUNG FROM THE BRIDGE WHICH REDUCES THE VERTICAL CLEARANCE ABOVE THE TOP OF RAIL AND HORIZONTAL CLEARANCE FROM CENTERLINE OF TRACKS OR ANY WORK OCCURRING OVER THE RAILROAD CLEARANCE LIMITS, MUST BE APPROVED BY THE RAILROAD PRIOR TO INSTALLATION. THE CONTRACTOR SHALL SUBMIT THEIR CONSTRUCTION SCHEME TO THE RAILROAD IN A TIMELY MANNER AND IN ACCORDANCE WITH THE GENERAL PROVISIONS AND SHALL THE CONTRACTOR SHALL MAKE NO CLAIM DUE TO DELAYS TO THEIR OPERATIONS CAUSE BY THE RAILROAD'S REVIEW.

3. UNLESS SPECIFICALLY AUTHORIZED BY THE RAILROADS REPRESENTATIVE, THE CONTRACTOR'S EQUIPMENT SHALL NOT BE OPERATED WITHIN THE RAILROAD'S RIGHT-OF-WAY.

4. REFER TO THE INVITATION FOR BIDS FOR ADDITIONAL INFORMATION REQUIRED FOR THE CONTRACTOR'S "RAILROAD PROTECTIVE LIABILITY POLICY".

5. THE CONTRACTOR'S EQUIPMENT OR MATERIALS SHALL NOT BE STORED ON THE RAILROAD'S RIGHT-OF-WAY.

6. FOR THE WORK INVOLVING THE RAILROAD, PLANS, PERMITS, ETC. AS REQUIRED BY THE RAILROAD, SHALL BE SUPPLIED BY THE CONTRACTOR AT NO ADDITIONAL COST TO THE AUTHORITY.

SECURITY AND GUIDELINES

1. CONTRACTOR SHALL COOPERATE IN ALL RESPECTS WITH UNITED STATES CUSTOMS AND BORDER PROTECTION, CANADA BORDER SERVICES AGENCY AND THE BUFFALO FORT ERIE PUBLIC BRIDGE AUTHORITY OFFICIALS AND PERSONNEL SO THAT BORDER SECURITY AND TRAFFIC ARE MAINTAINED.

2. CONTRACTOR IS RESPONSIBLE FOR OBTAINING BADGES FOR ALL EMPLOYEES, SUBS, SUPPLIERS AND ANY OTHER VISITORS THAT WILL BE ON SITE ON THE CONTRACTOR'S BEHALF. VETTING OF PARTIES SHALL BE COORDINATED WITH THE BUFFALO FORT ERIE PUBLIC BRIDGE AUTHORITY.

3. THE CONTRACTOR SHALL ENSURE THAT ALL SECURITY CLEARANCES ARE OBTAINED IF REQUIRED AND THAT ALL CUSTOMS AND BORDER PATROL GUIDELINES AND REQUIREMENTS ARE MET. THE CONTRACTOR SHALL OBTAIN APPROVALS, BADGES, AND ESCORTS PRIOR TO COMMENCEMENT OF ANY WORK, IF NECESSARY, WITHIN THE INTERNATIONAL BRIDGE CROSSING AREA.

K. J. YUSZK
100179098
PROFESSIONAL ENGINEER
PROVINCE OF ONTARIO

FILE NAME:

THESE DESIGN DOCUMENTS ARE PREPARED SOLELY FOR THE USE BY THE PARTY WITH WHOM THE DESIGN PROFESSIONAL HAS ENTERED INTO A CONTRACT AND THERE ARE NO REPRESENTATIONS OF ANY KIND MADE BY THE DESIGN PROFESSIONAL TO ANY PARTY WITH WHOM THE DESIGN PROFESSIONAL HAS NOT ENTERED INTO A CONTRACT

No.	Revisions	Date	By	No.	Revisions Cont.	Date	By

BUFFALO AND FORT ERIE PUBLIC BRIDGE AUTHORITY
BUFFALO AND FORT ERIE PUBLIC BRIDGE AUTHORITY
100 QUEEN STREET
FORT ERIE, ON L2A 3S6 CANADA

wsp
50 Lakefront Boulevard
Suite 111
Buffalo, NY 14202

STATE OF NEW YORK
DAVID P. DOMENICI
093613
PROFESSIONAL ENGINEER
02/25/2021

BUFFALO AND FORT ERIE PUBLIC BRIDGE AUTHORITY GEC 2020-2023
BRIDGE PIER REHABILITATION

GENERAL NOTES (1 OF 2)

Designed: RLL | Drawn: KLW | Checked: SFD | Date: 01-22-2021

Project No: 30900145
WBS: 30900145
Sheet No. 4 OF 37
Dwg No. G-003

MATERIAL NOTES:

CONCRETE

1. CONCRETE – MINIMUM COMPRESSIVE STRENGTH AT 28 DAYS OF 4500 P.S.I. UNLESS OTHERWISE NOTED OR SPECIFIED BY APPLICABLE ITEM.

2. THE EDGE OF CONCRETE REMOVAL SHALL BE DELINEATED BY SAWCUTTING TO 1" NOMINAL DEPTH. ANY DAMAGE TO EXISTING REINFORCEMENT OR CONCRETE TO REMAIN AS A RESULT OF THE CONTRACTOR'S SAW CUTTING AND/OR CONCRETE REMOVAL OPERATIONS SHALL BE CORRECTED BY THE CONTRACTOR AT NO ADDITIONAL COST TO THE AUTHORITY.

3. ALL FORMS USED SHALL BE REMOVABLE FORMS.

4. THE CONTRACTOR SHALL PREPARE ON SITE A 24" x 24" CONCRETE SAMPLE USING THE PROPOSED COLOR COMPLETE WITH RUSTICATION DETAIL FOR COMPARISON TO THE ORIGINAL CONCRETE, AND SUBJECT TO AUTHORITY APPROVAL PRIOR TO STARTING THE WORK.

5. THE CONTRACTOR SHALL BE RESPONSIBLE FOR PREVENTING CONCRETE STAINS OR DISCOLORATION DURING CONSTRUCTION UNTIL SUCH TIME AS THE SURFACES ARE APPROVED AND ACCEPTED. ANY CONCRETE STAINS OR DISCOLORATIONS PRIOR TO ACCEPTANCE OF THE SURFACES SHALL BE REMOVED BY THE CONTRACTOR AT NO EXPENSE TO THE AUTHORITY.

6. ALL FORMING HARDWARE SUCH AS TIES AND ALL THREADS THAT ARE TO REMAIN IN THE CONCRETE SHALL BE MADE OF STAINLESS STEEL, ELECTROPLATED OR MADE OF NON–FERROUS MATERIAL TO PREVENT CORROSION.

7. ALL EXPOSED CONCRETE EDGES SHALL BE CHAMFERED 1" UNLESS OTHERWISE NOTED.

8. THE MINIMUM COVER OVER REINFORCEMENT SHALL BE 2" UNLESS OTHERWISE NOTED.

9. CONTRACTOR SHALL FOLLOW HOT/COLD WEATHER CONCRETE REQUIREMENTS STATED IN NYSDOT STANDARD SPECIFICATIONS DURING HOT/COLD WEATHER CONDITIONS.

10. CONTRACTOR SHALL CURE AND SEAL NEW CONCRETE PER NYSDOT STANDARD SPECIFICATIONS.

REINFORCING STEEL

1. STEEL REINFORCEMENT SHALL BE IN ACCORDANCE WITH ASTM A615 GRADE 60.

2. ALL REINFORCEMENT SHALL BE LAP SPLICED 30 BAR DIAMETERS UNLESS OTHERWISE SHOWN.

3. ALL REINFORCEMENT SHALL BE COLD BENT IN ACCORDANCE WITH STANDARDS ESTABLISHED BY THE CRSI MANUAL OF STANDARD PRACTICE. UNDER NO CIRCUMSTANCES SHALL HEAT BE APPLIED TO THE BARS TO OBTAIN BENDS.

4. WIRE FABRIC REINFORCEMENT SHALL BE IN ACCORDANCE WITH ASTM A1064.

5. CONTRACTOR IS RESPONSIBLE FOR PROVIDING ALL NECESSARY TIES, CHAIRS, SPACERS AND ALL OTHER RELATED APPURTENANCES FOR THE CORRECT PLACEMENT OF REINFORCEMENT.

CONSTRUCTION NOTES:

1. THE ENGINEER SHALL BE PERMITTED TO REVIEW ALL SCAFFOLDING, LADDERS, PLATFORMS, RIGGING FALSEWORK AND SHORING SHOP DRAWINGS PRIOR TO FABRICATION, INSTALLATION OR ERECTION. THE ENGINEER'S REVIEW OF THESE ELEMENTS IN NO WAY RELIEVES THE CONTRACTOR FROM THE RESPONSIBILITY OF REVIEWING THE DESIGN AND GETTING THE APPROVAL OF A LICENSED PROFESSIONAL ENGINEER.

2. AT LEAST TWO (2) WORKING DAYS PER DRAWING, WITH A MINIMUM OF TEN (10) WORKING DAYS SHALL BE ALLOWED FOR EACH SET OF DRAWINGS SUBMITTED FOR THE ENGINEER'S REVIEW. NO WORK MAY BEGIN UNTIL THE RESPECTIVE SUBMITTALS ARE APPROVED. ALL COSTS FOR PREPARING THESE PLANS AND CALCULATIONS SHALL BE INCLUDED IN THE VARIOUS ITEMS OF THE CONTRACT.

3. ALL SCAFFOLDING, PLATFORMS, RIGGING, FALSEWORK AND SHORING DESIGNS SHALL BE REVIEWED, APPROVED AND STAMPED AND SIGNED BY A LICENSED PROFESSIONAL ENGINEER IN THE JURISDICTION FOR WHICH THE SCAFFOLDING, PLATFORMS, RIGGING, FALSEWORK AND SHORING DESIGNS ARE TO BE ERECTED.

CONCRETE REMOVAL

1. A NOMINAL 15 POUND CLASS CHIPPING HAMMER SHALL BE USED FOR CONCRETE REMOVAL ALONG BOUNDARIES OR REMOVAL AREAS, BENEATH REINFORCEMENT AND NEAR ALL EXPOSED OR ENCASED STRUCTURAL STEEL.

2. DEMOLITION ON PIER B SHALL BE PERMITTED ONLY BETWEEN THE HOURS OF 7:00 AM AND 9:00 PM.

3. ALL DEBRIS GENERATED FROM CONCRETE REMOVAL OPERATIONS SHALL BECOME THE PROPERTY OF THE CONTRACTOR, WHO SHALL PROMPTLY REMOVE AND DISPOSE SAME DEBRIS FROM SITE.

4. DEPTHS AND LENGTHS OF CONCRETE REMOVAL LIMITS SHOWN ARE PROVIDED ONLY AS A GENERAL GUIDE FOR REPAIR LOCATION AND FOR BIDDING PURPOSES. ACTUAL LIMITS WILL BE DELINEATED BY THE CONTRACTOR AND APPROVED BY THE ENGINEER IN THE FIELD. PAYMENT FOR REMOVAL OR REPLACEMENT BEYOND SPECIFIED LIMITS OUTLINED HEREIN WILL NOT BE MADE WITHOUT THE ENGINEER'S APPROVAL PRIOR TO TIME OF REMOVAL.

EXISTING REINFORCEMENT

1. EXISTING REINFORCEMENT EXPOSED BY CONCRETE REMOVAL SHALL BE STRAIGHTENED, CLEANED AND CUT OFF AT LOCATIONS SHOWN ON THE PLANS FOR USE AS DOWELS FOR PLACEMENT OF NEW REINFORCEMENT.

TEMPORARY SUPPORTS

1. THE CONTRACTOR SHALL PROVIDE ALL TEMPORARY SUPPORTS, BRACING AND OTHER DEVICES REQUIRED OR DIRECTED BY THE ENGINEER TO PROTECT THE STABILITY OF THE ADJACENT STRUCTURES, ROADWAYS AND UTILITIES.

INSTALLATION NOTES:

1. THE CONTRACTOR SHALL SUBMIT A DETAILED PROCEDURE FOR ACCESS INSTALLATION, STAGING, MATERIAL HANDLING, LIFTS AND CONCRETE REMOVALS; AS WELL AS, A COMPLETE CONSTRUCTION SCHEDULE TO PERFORM WORK COVERED HEREIN TO THE AUTHORITY FOR REVIEW AND APPROVAL PRIOR TO COMMENCING ANY WORK. ANY BACKUP MATERIAL SUCH AS CRANE CAPACITIES, ARRANGEMENT, PICK WEIGHTS ETC. SHALL BE SUBMITTED AS PART OF THE DETAILED PROCEDURE.

2. DURING REMOVAL OPERATIONS, THE CONTRACTOR SHALL NOT BE ALLOWED TO DROP WASTE CONCRETE, DEBRIS OR OTHER MATERIAL BELOW THE BRIDGE, ONTO THRUWAY ROW, ONTO RAILROAD ROW, OR INTO THE NIAGARA RIVER OR BLACK ROCK CANAL. PLATFORMS, NETS, SCREENS OR OTHER PROTECTIVE DEVICES SHALL BE USED TO CATCH THE MATERIAL. IF THE ENGINEER DETERMINES THAT ADEQUATE PROTECTIVE DEVICES ARE NOT EMPLOYED, THE WORK SHALL BE SUSPENDED UNTIL ADEQUATE PROTECTION IS PROVIDED. IF MATERIAL FALLS ON THE AREA BELOW AND ADJACENT TO THE BRIDGE, IT SHALL BE REMOVED AND DISPOSED OF BY THE CONTRACTOR IMMEDIATELY.

3. THE CONTRACTOR SHALL PERFORM ALL WORK IN ACCORDANCE WITH THE ENVIRONMENTAL AGENCIES HAVING JURISDICTION.

4. THE COST OF FURNISHING, INSTALLING, MAINTAINING, REMOVING AND DISPOSING OF ALL PLATFORMS, NETS, SCREENS OR OTHER PROTECTIVE DEVICES SHALL BE INCLUDED IN THE UNIT BID PRICES OF THE APPROPRIATE ITEMS OF THE CONTRACT.

BRIDGE FEATURE LIGHTING

1. THE CONTRACTOR SHALL BE RESPONSIBLE FOR THE MAINTENANCE OF ALL EXISTING UTILITIES FOR THE DURATION OF THE CONTRACT. SPECIAL CARE SHALL BE TAKEN TO PROTECT BRIDGE FEATURE LIGHTING UNITS AND CONDUITS WHEN WORKING ABOVE SAID FEATURE LIGHTING LOCATED ON THE RIVER PIERS. THIS PROTECTION SHALL BE APPROVED BY THE AUTHORITY PRIOR TO COMMENCING ANY WORK ABOVE AND ADJACENT TO EXISTING FEATURE LIGHTING INSTALLATIONS.

2. IF FEATURE LIGHTING IS TEMPORARILY REMOVED BY THE CONTRACTOR, IT SHALL BE REMOVED AND REPLACED IN–KIND TO THE SATISFACTION OF THE ENGINEER. DAMAGE TO ANY PORTION OF THE BRIDGE LIGHTING SYSTEM BY THE CONTRACTOR SHALL BE REPAIRED OR REPLACED AT NO ADDITIONAL COST TO THE AUTHORITY AND SHALL BE PERFORMED TO THE SATISFACTION OF THE ENGINEER.

3. FEATURE LIGHTING MAY ONLY BE REMOVED FOR SHORT PERIODS OF TIME AT A SPECIFIC PIER WHILE WORK IS ACTUALLY BEING PERFORMED AT SAID PIER. LIGHTING MUST REMAIN IN OPERATION UNTIL WORKING PROCEDURES WARRANT REMOVAL OF LIGHTING SYSTEM.

4. LIGHTING MUST BE REINSTALLED IMMEDIATELY AFTER WORK THAT WARRANTED REMOVAL OF THE LIGHTING IS COMPLETED. LIGHTING MUST BE REINSTALLED AT ONE PIER BEFORE REMOVAL CAN BE PERFORMED AT ANOTHER.

5. PHOTOGRAPHS OF ALL PIER CAPS AND FEATURE LIGHTING INSTALLATION DETAILS INCLUDING CONDUIT SYSTEMS AND JUNCTION BOXES SHALL BE TAKEN AND ELECTRONICALLY SUBMITTED TO THE AUTHORITY PRIOR TO COMMENCEMENT OF WORK.

ACCEPTANCE TESTING AND INSPECTION

1. THE CONTRACTOR SHALL FURNISH AND INSTALL ITEMS AND MATERIALS SPECIFIED IN THE CONTRACT DOCUMENTS PER THE CONTRACT DOCUMENTS AND SPECIFICATIONS. ANY PRODUCTS OR INSTALLATION FOUND TO BE UNACCEPTABLE SHALL BE REPLACED BY THE CONTRACTOR AT NO ADDITIONAL COST TO THE OWNER AND WILL BE SUBJECT TO SUBSEQUENT ACCEPTANCE TESTING AND INSPECTION.

2. THE CONTRACTOR SHALL PROVIDE SAFE ACCESS FOR INSPECTION AND TESTING OF ALL WORK AS REQUIRED BY THE AUTHORITY AND AUTHORITY'S ENGINEER.

K. J. YUSZK
100179098
PROVINCE OF ONTARIO

FILE NAME:

THESE DESIGN DOCUMENTS ARE PREPARED SOLELY FOR THE USE BY THE PARTY WITH WHOM THE DESIGN PROFESSIONAL HAS ENTERED INTO A CONTRACT AND THERE ARE NO REPRESENTATIONS OF ANY KIND MADE BY THE DESIGN PROFESSIONAL TO ANY PARTY WITH WHOM THE DESIGN PROFESSIONAL HAS NOT ENTERED INTO A CONTRACT

No.	Revisions	Date	By

No.	Revisions Cont.	Date	By

BUFFALO AND FORT ERIE PUBLIC BRIDGE AUTHORITY
BUFFALO AND FORT ERIE PUBLIC BRIDGE AUTHORITY
100 QUEEN STREET
FORT ERIE, ON L2A 3S6 CANADA

wsp
50 Lakefront Boulevard
Suite 111
Buffalo, NY 14202

STATE OF NEW YORK
PAUL F. DONEGAN
093613
LICENSED PROFESSIONAL ENGINEER
02/25/2021

BUFFALO AND FORT ERIE PUBLIC BRIDGE AUTHORITY GEC 2020-2023
BRIDGE PIER REHABILITATION

GENERAL NOTES (2 OF 2)

Designed:	RLL	Drawn:	KLW	Checked:	SFD	Date:	01-22-2021

Project No:	30900145
WBS:	30900145
Sheet No.	5 OF 37
Dwg. No.	G-004

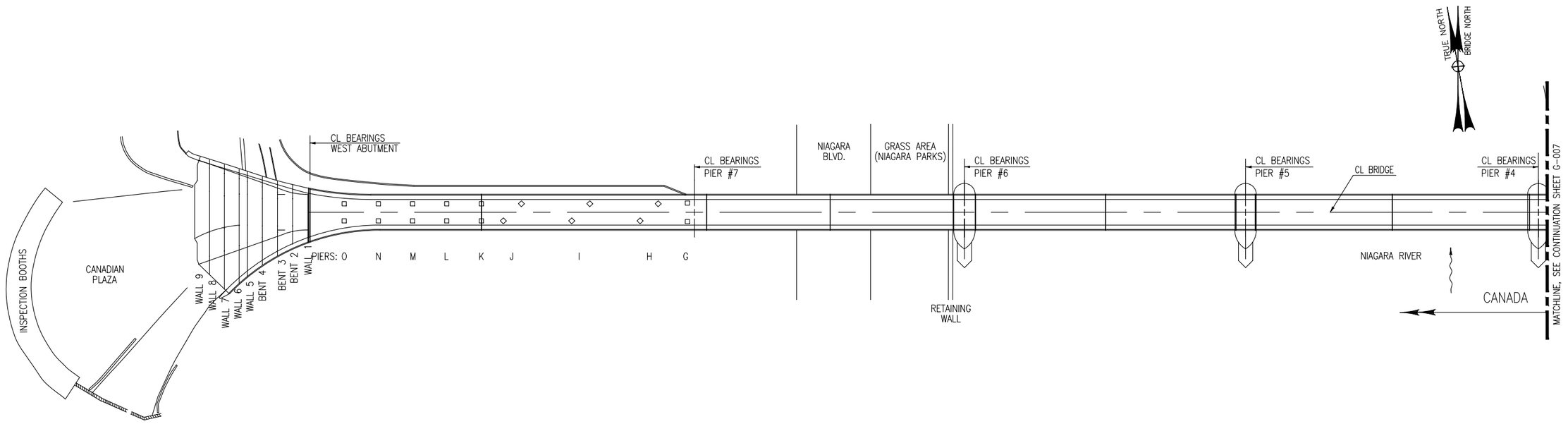

PLAN

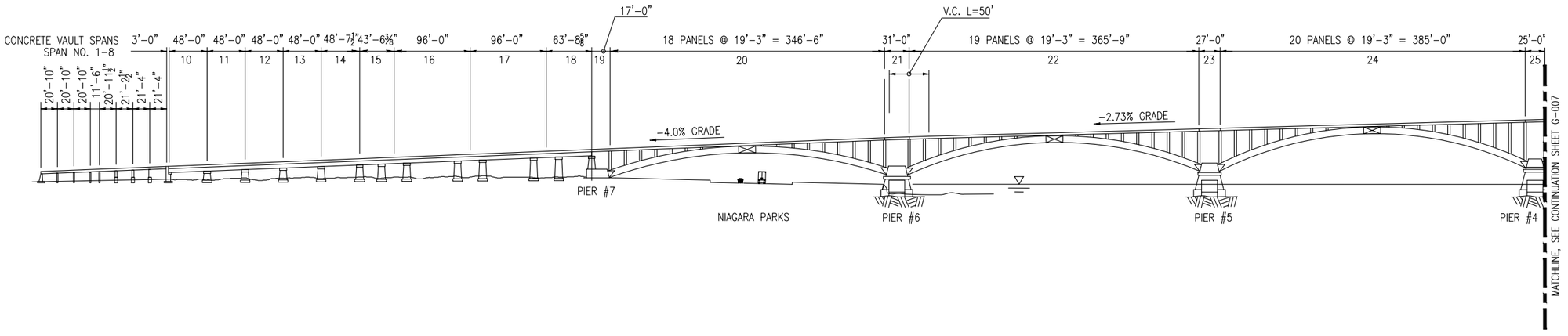

ELEVATION

(PROJECTED ALONG CENTERLINE OF BRIDGE)

150 0 150

SCALE: 1"=150'

FILE NAME:

THESE DESIGN DOCUMENTS ARE PREPARED SOLELY FOR THE USE BY THE PARTY WITH WHOM THE DESIGN PROFESSIONAL HAS ENTERED INTO A CONTRACT AND THERE ARE NO REPRESENTATIONS OF ANY KIND MADE BY THE DESIGN PROFESSIONAL TO ANY PARTY WITH WHOM THE DESIGN PROFESSIONAL HAS NOT ENTERED INTO A CONTRACT

No.	Revisions	Date	By	No.	Revisions Cont.	Date	By

BUFFALO AND FORT ERIE PUBLIC BRIDGE AUTHORITY

BUFFALO AND FORT ERIE PUBLIC BRIDGE AUTHORITY
100 QUEEN STREET
FORT ERIE, ON L2A 3S6 CANADA

wsp
50 Lakefront Boulevard
Suite 111
Buffalo, NY 14202

BUFFALO AND FORT ERIE PUBLIC BRIDGE AUTHORITY GEC 2020-2023
BRIDGE PIER REHABILITATION

GENERAL PLAN & ELEVATION (1 OF 2)

Designed: RLL | Drawn: KLW | Checked: SFD | Date: 01-22-2021

Project No: 30900145
WBS: 30900145
Sheet No. 6 OF 37
Dwg. No. G-005

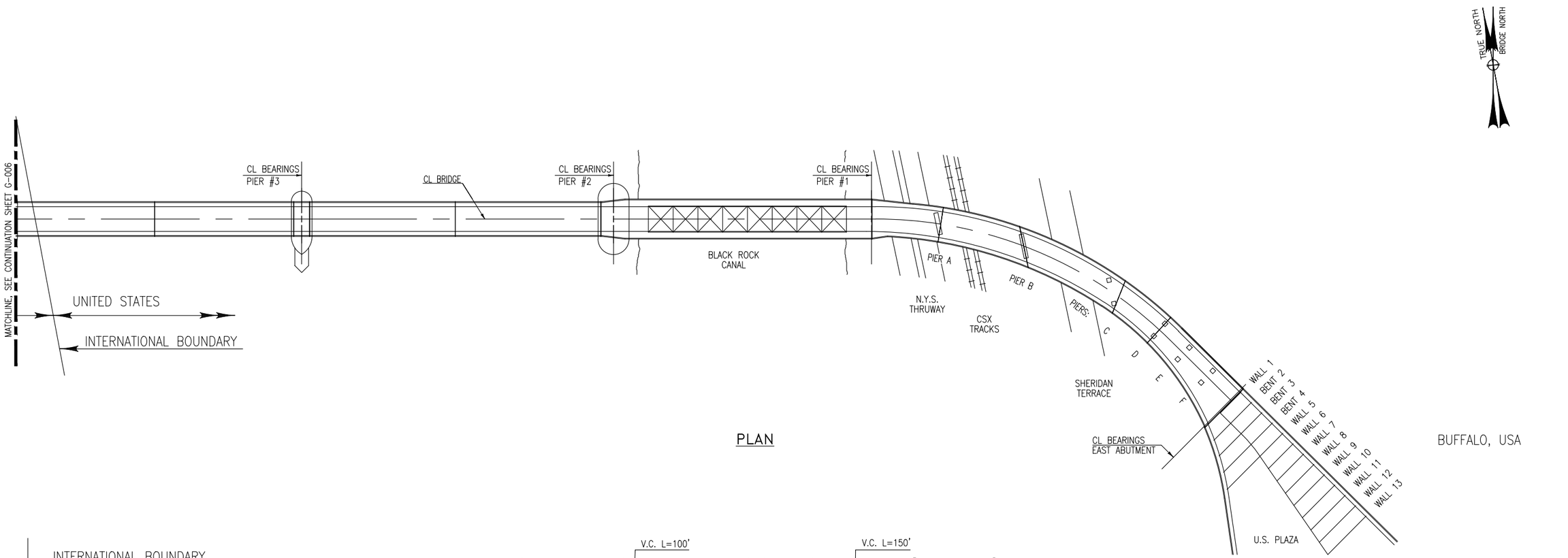

PLAN

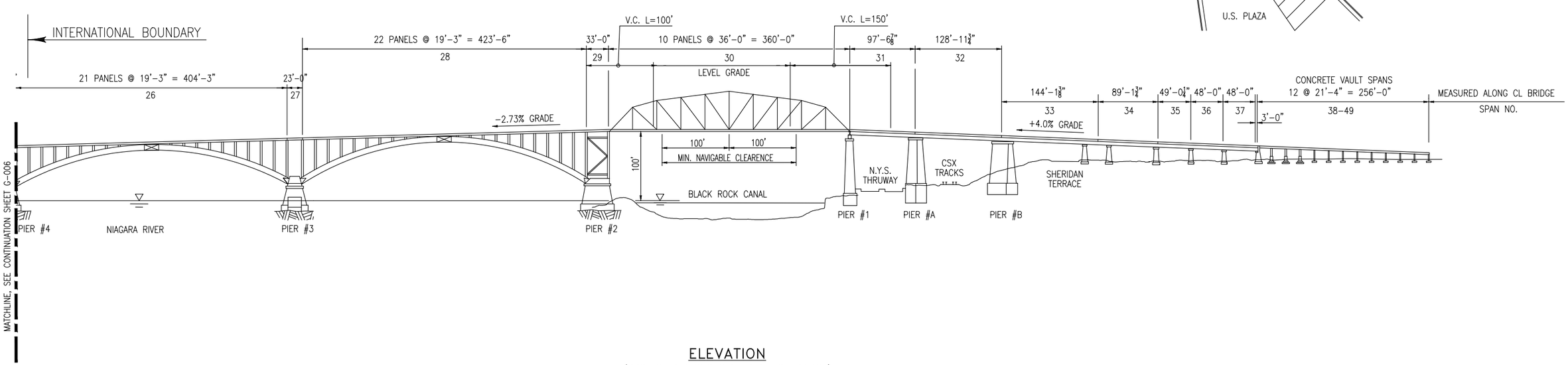

ELEVATION

(PROJECTED ALONG CENTERLINE OF BRIDGE)

K. J. YUSEK 100179095 PROVINCE OF ONTARIO

150 0 150

SCALE: 1"=150'

FILE NAME:

THESE DESIGN DOCUMENTS ARE PREPARED SOLELY FOR THE USE BY THE PARTY WITH WHOM THE DESIGN PROFESSIONAL HAS ENTERED INTO A CONTRACT AND THERE ARE NO REPRESENTATIONS OF ANY KIND MADE BY THE DESIGN PROFESSIONAL TO ANY PARTY WITH WHOM THE DESIGN PROFESSIONAL HAS NOT ENTERED INTO A CONTRACT

No.	Revisions	Date	By

No.	Revisions Cont.	Date	By

BUFFALO AND FORT ERIE PUBLIC BRIDGE AUTHORITY

BUFFALO AND FORT ERIE PUBLIC BRIDGE AUTHORITY
100 QUEEN STREET
FORT ERIE, ON L2A 3S6 CANADA

wsp
50 Lakefront Boulevard
Suite 111
Buffalo, NY 14202

STATE OF NEW YORK — DOUGLAS E. DONERKIEWICZ — 090813 — LICENSED PROFESSIONAL ENGINEER
02/25/2021

BUFFALO AND FORT ERIE PUBLIC BRIDGE AUTHORITY GEC 2020-2023
BRIDGE PIER REHABILITATION

GENERAL PLAN & ELEVATION (2 OF 2)

Designed:	RLL	Drawn:	KLW	Checked:	SFD	Date:	01-22-2021

Project No:	30900145
WBS:	30900145
Sheet No.	7 OF 37
Dwg. No.	G-006

GENERAL PIER REPAIR NOTES:

1. SUBSTRUCTURE DETERIORATION REQUIRING REPAIR, HAS BEEN DETERMINED BY FIELD INSPECTION AND TESTING INDICATED ON THE PLANS. ALL OF THE MAJOR AREAS KNOWN TO EXIST AT THAT TIME HAVE BEEN SHOWN TO INDICATE THE APPROXIMATE EXTENT OF DETERIORATION REQUIRING REPAIR.
2. REPAIR AREAS ON THE PLANS DENOTED BY THE LEGEND ON EACH SHEET INDICATE THE ANTICIPATED EXTENT OF CONCRETE REMOVAL AND REPLACEMENT WITH CLASS D CONCRETE. LIMITS OF UNSOUND/DETERIORATED CONCRETE SHALL BE DETERMINED BY SOUNDING WITH A HAMMER FOR DULL HOLLOW SOUNDS USING THE PLANS AS A GUIDE. COST TO BE INCLUDED IN ITEM 600. THE EXTENT OF CONCRETE REMOVAL AND REPLACEMENT SHALL BE APPROVED BY THE ENGINEER PRIOR TO SAWCUTTING OR CONCRETE REMOVAL OPERATIONS. CONTRACTOR SHALL BE RESPONSIBLE FOR REPAIRING, AT HIS OWN EXPENSE, AREAS BEYOND THE APPROVED LIMITS RESULTING FROM CONTRACTOR OPERATIONS.
3. DIMENSIONS OF CHAMFERS AND RUSTICATIONS MAY VARY FROM DIMENSIONS SHOWN ON THESE PLANS. CONTRACTOR SHALL MATCH EXISTING DIMENSIONS OF CHAMFERS AND RUSTICATION, UNLESS DIRECTED OTHERWISE BY THE ENGINEER.
4. RECORD PLANS FOR THE PEACE BRIDGE (DATED 1925) INDICATE NO REINFORCEMENT PRESENT IN THE STEMS (AREAS BELOW THE PIER CAP) OF RIVER PIERS 2–6.
5. CONTRACTORS SHALL USE EXTREME CARE IN THE HANDLING, STORAGE AND REINSTALLATION OF THE FEATURE LIGHTING ON THE CAPS OF PIERS 2–6. SEE FEATURE LIGHTING NOTES ON DRAWING NO G–004.
6. IN AREAS WHERE REINFORCEMENT IS EXPOSED DURING REMOVAL OPERATIONS TO DEPTHS INDICATED ON THE PLANS, THE MINIMUM DEPTH OF REMOVAL SHALL BE AT A DEPTH NO LESS THAN ONE AND ONE–HALF INCH FROM THE REAR MOST POINT OF EXPOSED REINFORCEMENT BAR. THE MAXIMUM DEPTH OF REMOVAL SHALL BE AS DIRECTED BY THE ENGINEER.
7. IF NO REINFORCEMENT IS EXPOSED, TIE BARS AND/OR WELDED WIRE FABRIC WILL BE ADDED IN ACCORDANCE WITH THE SPECIFICATIONS AND DETAILS SHOWN IN THE PLANS OR AS DIRECTED BY THE ENGINEER. COST TO BE INCLUDED IN ITEM 600.
8. EXISTING EXPOSED REINFORCEMENT SHALL BE CLEANED OF CONCRETE AND RUST TO THE SATISFACTION OF THE ENGINEER. COST TO BE INCLUDED IN ITEM 600.
9. DETERIORATED OR DAMAGED REINFORCEMENT SHALL BE SUPPLEMENTED WITH NEW REINFORCEMENT AS DESCRIBED IN THE PLANS AND SPECIFICATIONS AND AS DIRECTED BY THE ENGINEER. COST TO BE INCLUDED IN ITEM 600.
10. THE CONTRACTOR, WHEN DIRECTED BY THE ENGINEER SHALL REMOVE CONCRETE TO DEPTHS LESS THAN OR GREATER THAN DEPTHS SHOWN ON THE PLANS. COST TO BE INCLUDED IN ITEM 600. CONCRETE REMOVAL DEPTHS UP TO AND INCLUDING 6" IN DEPTH SHALL BE PAID AT THE UNIT PRICE BID PER SQUARE FOOT FOR ITEM 600. DEPTHS BEYOND 6" SHALL BE PAID ON A RATIO OF ACTUAL DEPTH / 6" * UNIT BID PRICE PER SF. NO REMOVALS BEYOND 6" DEPTH SHALL BE DONE EXCEPT AT THE DIRECTION OF THE ENGINEER.
11. CONTRACTOR SHALL USE EXTREME CARE IN REMOVAL OF CONCRETE FROM ARCH RIB THRUST BLOCKS, AS INDICATED ON THE PLANS, TO PREVENT DAMAGE TO THE UNDERLYING STRUCTURAL STEEL. EXPOSED STRUCTURAL STEEL SHALL BE PREPARED IN ACCORDANCE WITH THE SPECIFICATION FOR ITEM 650.
12. PRIOR TO THE PLACEMENT OF NEW CONCRETE, THE CONTRACTOR SHALL ENSURE THAT THE ROUGHNESS OF ALL SURFACES WHICH WILL BE IN CONTACT WITH NEW CONCRETE MEET OR EXCEED THE INTERNATIONAL CONCRETE REPAIR INSTITUTE (ICRI) GUIDELINE 03732–SURFACE PROFILE CRITERIA #7. THE ENGINEER SHALL DETERMINE IF THE PROFILE CRITERIA IS MET. COST TO BE INCLUDED IN ITEM 600.
13. ALL INJECTABLE CRACKS IN CONCRETE REPAIR AREAS SHALL BE INJECTED AFTER REMOVAL OF CONCRETE BUT PRIOR TO INSTALLATION OF FORMWORK AND PLACEMENT OF CONCRETE. CRACK REPAIR COST TO BE INCLUDED IN ITEM 700.
14. PRIOR TO CONCRETE PLACEMENT SURFACES SHALL BE WATER BLASTED TO REMOVE ALL DUST AND PARTICULATES. COST TO BE INCLUDED IN ITEM 600.
15. WHERE CONCRETE REMOVAL AND REPLACEMENT NECESSITATES CREATION OF A CONSTRUCTION JOINT BETWEEN SUCCESSIVE CONCRETE PLACEMENTS, CONCRETE PLACEMENT SHALL STOP ONE FOOT SHORT OF THE LIMIT OF ORIGINAL CONCRETE REMOVAL. THIS CLEARANCE SPACE IS INTENDED TO MINIMIZE THE NEGATIVE IMPACT OF THE ADJACENT CONCRETE REMOVAL OPERATION ON THE RECENTLY COMPLETED REPAIR.
16. IN SEQUENCING WORK, THE CONTRACTOR SHALL NOT BEGIN CONCRETE REMOVAL AT LOCATION IMMEDIATELY ADJACENT TO A COMPLETED REPAIR UNTIL A MINIMUM OF 7 CURING DAYS HAS PASSED.
17. SEALING OF NEW AND EXISTING CONCRETE IN ACCORDANCE WITH THE SPECIFICATIONS (ITEM 800) SHALL NOT BE PERFORMED UNTIL COMPLETION OF ITEMS 600 AND 700 AT EACH PIER.
18. ALL FINISHED CONCRETE REPAIRS SHALL MATCH THE EXISTING CONCRETE IN REGARD TO DIMENSION, SHAPE, COLOR, AND ARCHITECTURAL TREATMENTS.
19. FOLLOWING COMPLETION OF ITEMS 600 & 700, AND PRIOR TO APPLICATION OF SEALER, CONTRACTOR SHALL CLEAN CONCRETE SURFACES TO REMOVE DISCOLORATION INCLUDING RUST STAINING AND GRAFFITI TO THE SATISFACTION OF THE ENGINEER.
20. TINTED SEALER COLOR SHALL BE "DOVER SKY" OR APPROVED EQUAL.
21. CONTRACTOR SHALL CONSTRUCT A MOCKUP SHOWING CONCRETE REPAIR AND SEALER APPLICATION OVER NEW AND EXISTING CONCRETE AT PIER 2 FOR INSPECTION AND APPROVAL BY THE AUTHORITY. THE MOCKUP SHALL BE APPROVED BY THE ENGINEER AND THE AUTHORITY BEFORE PROCEEDING WITH OTHER REPAIR & SEALING WORK.
22. EXISTING OPEN CORE HOLES SHALL BE FILLED WITH REPAIR CONCRETE PRIOR TO APPLICATION OF SEALER. INCLUDE COST IN PRICE BID FOR ITEM 600.

APPROXIMATE ITEM QUANTITIES PER PIER

LOCATION	PIER	CONCRETE REPAIR ITEM 600 [SF]	CRACK REPAIR ITEM 700 [LF]	CONCRETE CLEANING, RUST REMOVAL & SEALING ITEM 800 [SF]
USA	B	0	240	5070
USA	A	124	10	7480
USA	1	576	180	10190
USA	2	0	60	9520
USA	3	0	20	6990
CANADA	4	0	20	6390
CANADA	5	0	85	6110
CANADA	6	0	25	5660
CANADA	7	0	15	2040

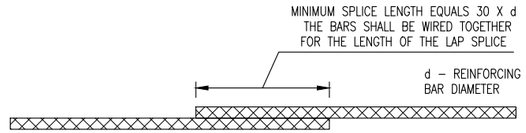

ADDED REINFORCING BARS SHALL HAVE A MINIMUM LAP OF 30 BAR DIAMETERS. ALTERNATIVELY, A WELDED SPLICE SHALL BE PROVIDED. IF WELDED ALL WELDING PROCEDURES AND QUALIFICATIONSSHALL BE IN ACCORDANCE WITH THE NEW YORK STATE STEEL CONSTRUCTION MANUAL OR CSA STANDARDS, AS APPLICABLE.

LAPPED, TIED SPLICE DETAIL

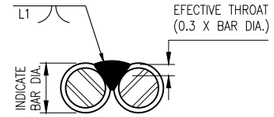

SINGLE FLARE V–GROOVE WELD

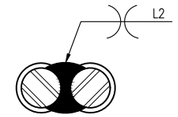

DOUBLE FLARE V–GROOVE WELD

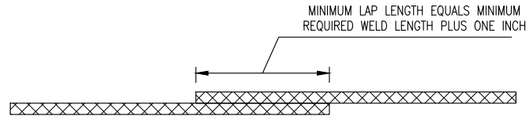

MINIMUM WELD LENGTHS

BAR SIZE	SINGLE FLARE V–GROVE L1	DOUBLE FLARE V–GROVE L2
4.5	4"	2 1/2"
6	4 1/2"	2 3/4""
7	5"	3"
8	5 1/2"	3 1/4"
9	6"	3 1/2"
10	6 1/2"	3 3/4"
11	7"	4"

WELDED SPLICE DETAILS FOR REINFORCEMENT

TO BE USED ONLY WHEN APPROVED BY THE ENGINEER

K. J. HUDIK
100179098
PROFESSIONAL ENGINEER
PROVINCE OF ONTARIO

FILE NAME:

THESE DESIGN DOCUMENTS ARE PREPARED SOLELY FOR THE USE BY THE PARTY WITH WHOM THE DESIGN PROFESSIONAL HAS ENTERED INTO A CONTRACT AND THERE ARE NO REPRESENTATIONS OF ANY KIND MADE BY THE DESIGN PROFESSIONAL TO ANY PARTY WITH WHOM THE DESIGN PROFESSIONAL HAS NOT ENTERED INTO A CONTRACT

No.	Revisions	Date	By	No.	Revisions Cont.	Date	By

BUFFALO AND FORT ERIE PUBLIC BRIDGE AUTHORITY
BUFFALO AND FORT ERIE PUBLIC BRIDGE AUTHORITY
100 QUEEN STREET
FORT ERIE, ON L2A 3S6 CANADA

wsp
50 Lakefront Boulevard
Suite 111
Buffalo, NY 14202

STATE OF NEW YORK
BRIAN P. DONOVAN
090615
PROFESSIONAL ENGINEER
03/25/2021

BUFFALO AND FORT ERIE PUBLIC BRIDGE AUTHORITY GEC 2020-2023
BRIDGE PIER REHABILITATION

CONCRETE PIER SURFACE REPAIR NOTES

Designed: RLL | Drawn: KLW | Checked: SFD | Date: 01-22-2021

Project No: 30900145
WBS: 30900145
Sheet No. 8 OF 37
Dwg. No. S-001

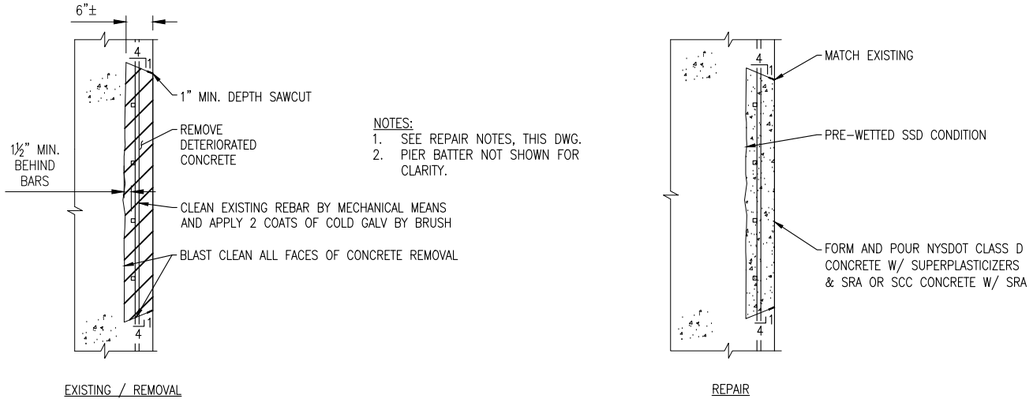

TYPICAL CONCRETE PATCHING, EXISTING REINFORCING EXPOSED
SCALE: NTS

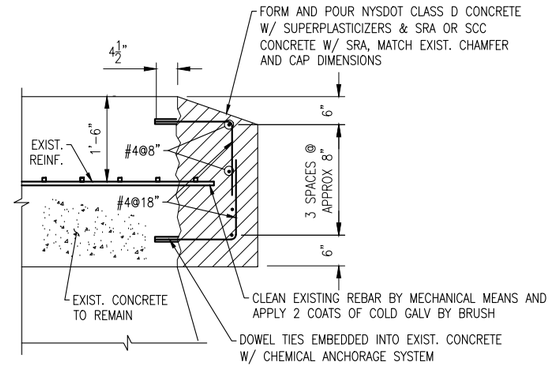

ALL WORK AS SHOWN SHALL BE PAID FOR UNDER CONCRETE REPAIR ITEM 600.

DETAIL – REINFORCEMENT DETAIL FOR CONCRETE PLACEMENT ALONG PIER CAP
SCALE: NTS

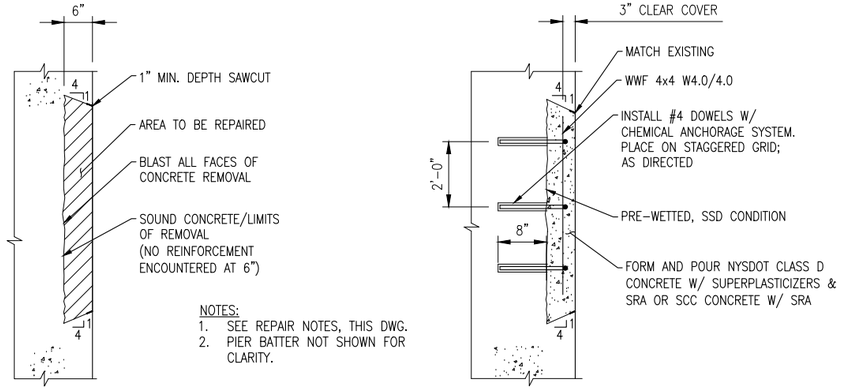

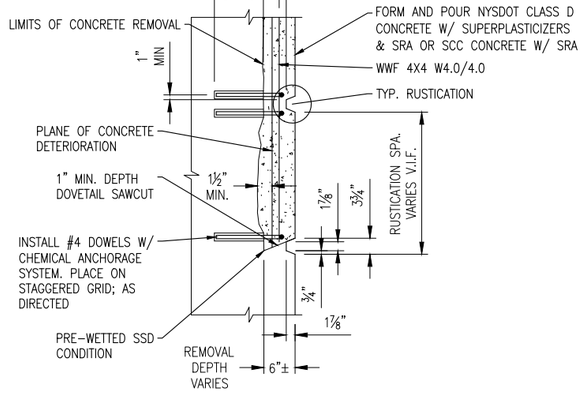

DETAIL – TYPICAL CONCRETE PATCHING EXISTING REINFORCEMENT NOT EXPOSED
SCALE: NTS

CONCRETE PIER SURFACE REPAIR – SUGGESTED SEQUENCE OF OPERATIONS (EACH PIER):

1. INSTALL ACCESS (ACCESS SHALL BE APPROVED BY THE ENGINEER PRIOR TO INSTALLATION).
2. DELINEATE REMOVAL AREAS. ENGINEER SHALL APPROVE REPAIR AREA DELINEATION PRIOR TO CONCRETE REMOVAL OPERATIONS.
3. DOVETAIL SAWCUT PERIMETER OF CONCRETE REMOVAL AREAS.
4. REMOVE CONCRETE AS PER PLANS AND SPECIFICATIONS AND ADJUST CONCRETE REMOVAL DEPTHS AS DIRECTED BY THE ENGINEER. AT ALL CONCRETE REMOVAL LOCATIONS WHERE REINFORCEMENT IS EXPOSED, THE MINIMUM DEPTH OF REMOVAL SHALL BE NO LESS THAN 1 1/2" FROM THE REARMOST POINT OF EXPOSED REINFORCEMENT BAR, OR TO SOUND CONCRETE, WHICHEVER IS GREATER. UNLESS OTHERWISE APPROVED BY THE ENGINEER, EXISTING REINFORCEMENT ENCOUNTERED IN REPAIR AREAS SHALL BE RETAINED. REINFORCEMENT SHALL BE CLEANED BY MECHANICAL MEANS. APPLY TWO COATS OF COLD GALVANIZING TO ALL EXPOSED REINFORCING BY BRUSH AFTER CLEANING.
5. REINFORCING STEEL THAT IS HEAVILY CORRODED AND/OR SAGGED OUT OF POSITION SHALL BE POINTED OUT TO THE ENGINEER. AS DETERMINED BY THE ENGINEER, REINFORCEMENT SHALL BE REPAIRED IN A MANNER SATISFACTORY TO THE ENGINEER ON A TIME AND MATERIALS BASIS. EXISTING REINFORCING WHICH IS TO REMAIN IN PLACE BUT IS DAMAGED BY THE CONTRACTOR DURING HIS OPERATIONS SHALL BE REPLACED TO THE SATISFACTION OF THE ENGINEER AT NO ADDITIONAL COST TO THE AUTHORITY.
6. INJECT CRACKS IN REPAIR AREAS AS DIRECTED BY THE ENGINEER.
7. INSTALL TIES, DOWELS, WWF AND REINFORCEMENT.
8. CLEAN CONCRETE REPAIR AREAS. PRIOR TO THE APPLICATION OF NEW CONCRETE, THE EXISTING CONCRETE SHALL BE WATER BLASTED TO REMOVE LOOSE DEBRIS AND CREATE A PROFILE. REBAR SHALL BE CLEANED BY MECHANICAL MEANS TO SSPC SP6, EXISTING CONCRETE SHALL BE PRE-WETTED TO SATURATED SURFACE DRY CONDITION.
9. FORM REPAIR AREAS AND RUSTICATIONS AS REQUIRED.
10. PLACE REPAIR CONCRETE. POURS SHALL BE LIMITED TO 12 FT MAXIMUM HEIGHTS.
11. ALLOW REPAIR CONCRETE TO CURE AT LEAST 14 DAYS PRIOR TO SEALING. FORMS CAN BE STRIPPED PRIOR TO 14 DAYS, PROVIDED THE REPAIR HAS REACHED AT LEAST 75% OF THE DESIGN COMPRESSIVE STRENGTH, AND THE REPAIR IS CURED UNTIL 14 DAYS HAS PASSED BY APPLYING A CURING AGENT (OR A CURE AND SEAL PRODUCT) PER MANUFACTURER'S RECOMMENDATIONS IMMEDIATELY (WITHIN 30 MINUTES) AFTER THE FORMS ARE PULLED.
    11.1. THE TIME TO REACH 75% OF THE DESIGN COMPRESSIVE STRENGTH SHALL BE DETERMINED BASED ON COMPRESSIVE STRENGTH TEST RESULTS OF THE CYLINDERS CAST FROM THE SAME CONCRETE THAT WAS USED FOR THE REPAIRS
12. REMOVE FORMS.
13. REPAIR REMAINING CRACKS.
14. SURFACE GRIND ALL REPAIR CONCRETE TO REMOVE FORM LINES, EXCESS CRACK INJECTION MATERIAL AND TO SMOOTH ROUGH EDGES.
15. FOLLOWING COMPLETION OF CONCRETE REPAIRS AND CRACK INJECTION, AND PRIOR TO APPLICATION OF SEALER, CONTRACTOR SHALL CLEAN CONCRETE SURFACES TO REMOVE DISCOLORATION INCLUDING RUST STAINING TO THE SATISFACTION OF THE ENGINEER.
16. WASH AND PREPARE ALL EXPOSED CONCRETE SURFACES IN ACCORDANCE WITH SPECIFICATION AND PER SEALING MANUFACTURER'S REQUIREMENTS.
17. APPLY SEALERS.
18. REMOVE ACCESS.

FILE NAME:

THESE DESIGN DOCUMENTS ARE PREPARED SOLELY FOR THE USE BY THE PARTY WITH WHOM THE DESIGN PROFESSIONAL HAS ENTERED INTO A CONTRACT AND THERE ARE NO REPRESENTATIONS OF ANY KIND MADE BY THE DESIGN PROFESSIONAL TO ANY PARTY WITH WHOM THE DESIGN PROFESSIONAL HAS NOT ENTERED INTO A CONTRACT

No.	Revisions	Date	By	No.	Revisions Cont.	Date	By

BUFFALO AND FORT ERIE PUBLIC BRIDGE AUTHORITY
BUFFALO AND FORT ERIE PUBLIC BRIDGE AUTHORITY
100 QUEEN STREET
FORT ERIE, ON L2A 3S6 CANADA

WSP
50 Lakefront Boulevard
Suite 111
Buffalo, NY 14202

K. J. YUSEK 100179098 PROFESSIONAL ENGINEER PROVINCE OF ONTARIO
STATE OF NEW YORK KEVIN J. DOMBROWSKI 093613 PROFESSIONAL ENGINEER
03/25/2021

BUFFALO AND FORT ERIE PUBLIC BRIDGE AUTHORITY GEC 2020-2023
BRIDGE PIER REHABILITATION

CONCRETE PIER SURFACE REPAIR TYPICAL DETAILS

Designed: RLL | Drawn: KLW | Checked: SFD | Date: 01-22-2021

Project No: 30900145
WBS: 30900145
Sheet No. 9 OF 37
Dwg. No. S-002

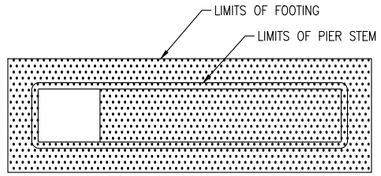

PLAN

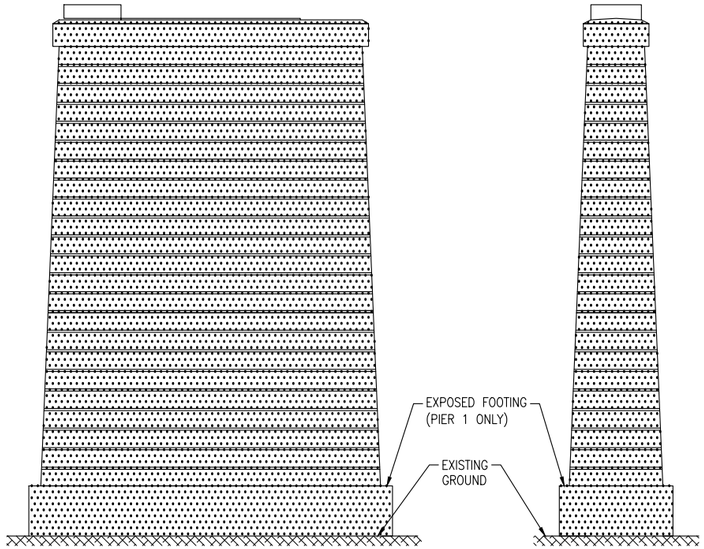

WEST ELEVATION
(EAST ELEVATION SIMILAR)

SOUTH ELEVATION
(NORTH ELEVATION SIMILAR)

PIER A SHOWN (PIERS B & 1 SIMILAR)
LIMITS OF SEALING
SEE NOTE 3

NOTES:

1. PIERS SHOWN ON THIS SHEET ARE REPRESENTATIVE ONLY. THEY ARE SHOWN TO INDICATE AREAS TO BE SEALED. PIERS SHOWN ON THIS SHEET SHOULD NOT BE USED TO ESTABLISH SUBSURFACE AREAS OR SEALING ITEMS QUANTITIES
2. PIER 2 DOES NOT INCLUDE NOSING OR ICEBREAKER AS SHOWN.
3. PIER 1 AND B FOOTINGS ARE EXPOSED.
4. PRIOR TO APPLICATION OF SEALER, THE CONTRACTOR SHALL CLEAN THE CONCRETE SURFACES TO REMOVE STAINING AND DISCOLORATION.

LEGEND:

LIMITS OF CONCRETE CLEANING, RUST REMOVAL & SEALING

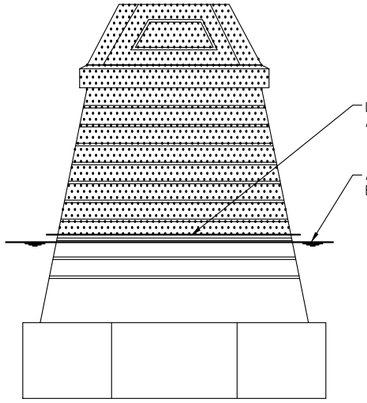

NORTH ELEVATION

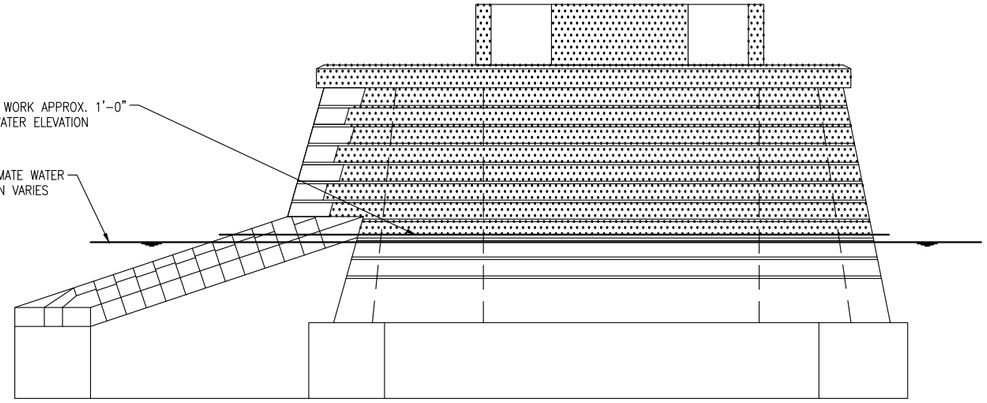

EAST ELEVATION
(WEST ELEVATION OPPOSITE HAND)

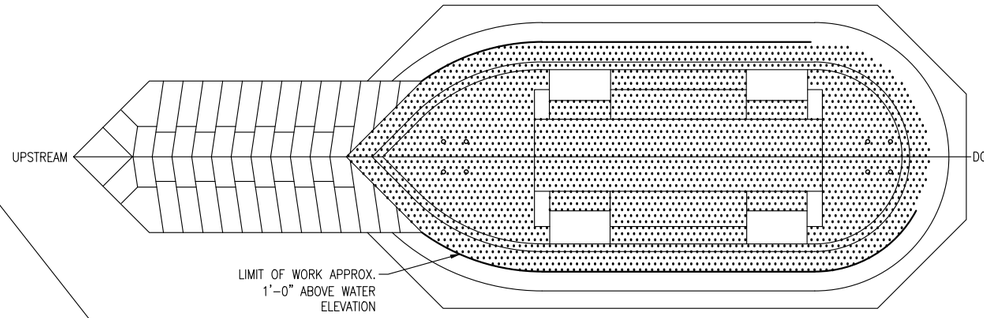

PLAN

PIER 3 SHOWN (PIERS 2, 4, 5, & 6 SIMILAR)
LIMITS OF SEALING
SEE NOTE 2

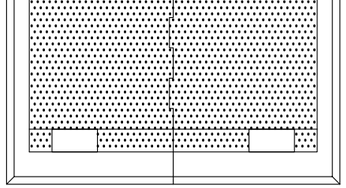

PLAN

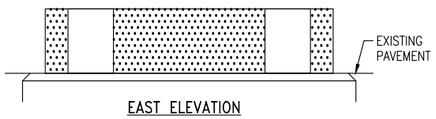

EAST ELEVATION

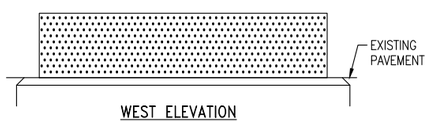

WEST ELEVATION

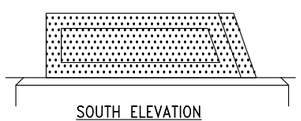

SOUTH ELEVATION
(NORTH ELEVATION OPPOSITE HAND)

PIER 7
LIMITS OF SEALING

THESE DESIGN DOCUMENTS ARE PREPARED SOLELY FOR THE USE BY THE PARTY WITH WHOM THE DESIGN PROFESSIONAL HAS ENTERED INTO A CONTRACT AND THERE ARE NO REPRESENTATIONS OF ANY KIND MADE BY THE DESIGN PROFESSIONAL TO ANY PARTY WITH WHOM THE DESIGN PROFESSIONAL HAS NOT ENTERED INTO A CONTRACT

FILE NAME:

No.	Revisions	Date	By

No.	Revisions Cont.	Date	By

BUFFALO AND FORT ERIE PUBLIC BRIDGE AUTHORITY
BUFFALO AND FORT ERIE PUBLIC BRIDGE AUTHORITY
100 QUEEN STREET
FORT ERIE, ON L2A 3S6 CANADA

50 Lakefront Boulevard
Suite 111
Buffalo, NY 14202

BUFFALO AND FORT ERIE PUBLIC BRIDGE AUTHORITY GEC 2020-2023
BRIDGE PIER REHABILITATION

LIMITS OF CONCRETE CLEANING, RUST REMOVAL & SEALING

Designed:	RLL	Drawn:	KLW	Checked:	SFD	Date:	01-22-2021

Project No:	30900145
WBS:	30900145
Sheet No.	10 OF 37
Dwg. No.	S-003

CRACK REPAIR QUANTITIES	
FACE	QUANTITIES [LF]
EAST	65
NORTH	5

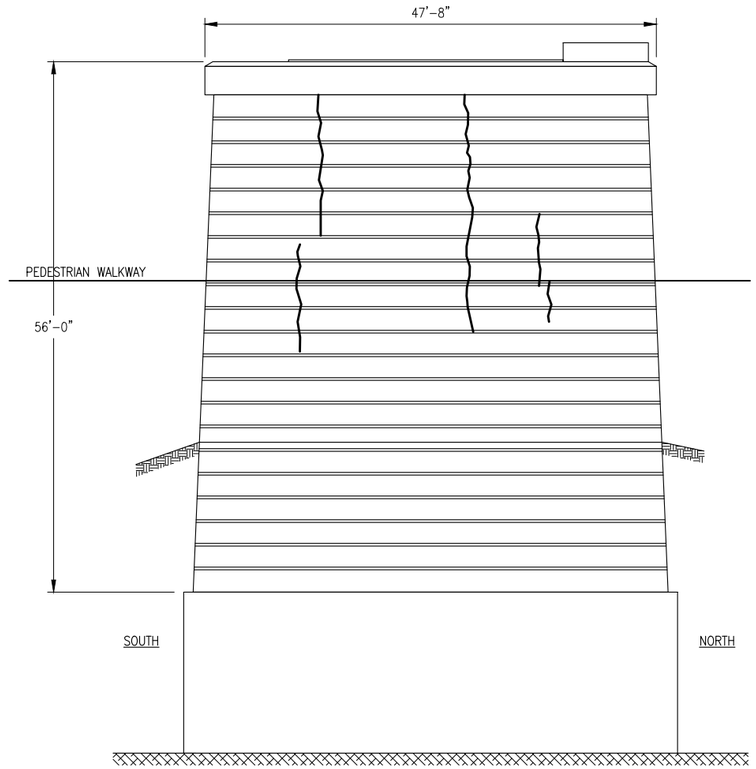

PIER B – EAST ELEVATION

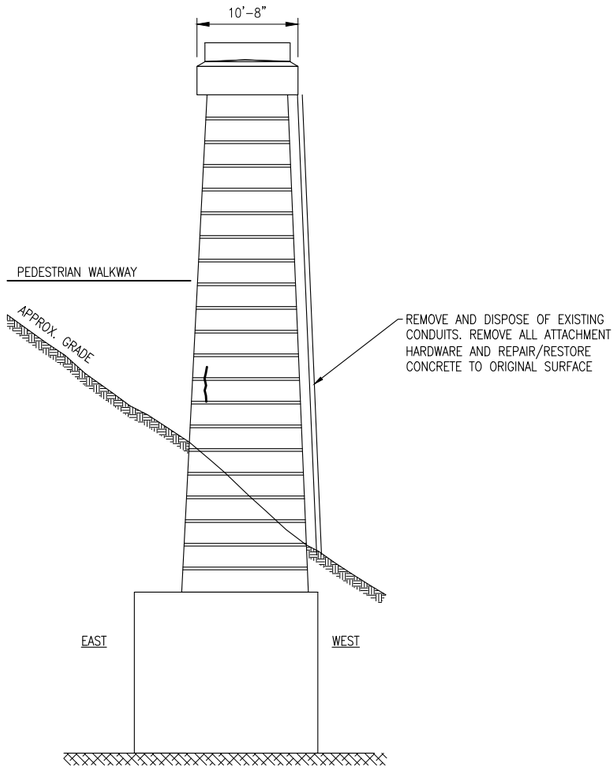

PIER B – NORTH ELEVATION

LEGEND

ITEM 700 – CRACK REPAIR

16 0 16

SCALE: 1/16"=1'-0"

FILE NAME:

THESE DESIGN DOCUMENTS ARE PREPARED SOLELY FOR THE USE BY THE PARTY WITH WHOM THE DESIGN PROFESSIONAL HAS ENTERED INTO A CONTRACT AND THERE ARE NO REPRESENTATIONS OF ANY KIND MADE BY THE DESIGN PROFESSIONAL TO ANY PARTY WITH WHOM THE DESIGN PROFESSIONAL HAS NOT ENTERED INTO A CONTRACT

No.	Revisions	Date	By	No.	Revisions Cont.	Date	By

BUFFALO AND FORT ERIE PUBLIC BRIDGE AUTHORITY
BUFFALO AND FORT ERIE PUBLIC BRIDGE AUTHORITY
100 QUEEN STREET
FORT ERIE, ON L2A 3S6 CANADA

WSP
50 Lakefront Boulevard
Suite 111
Buffalo, NY 14202

BUFFALO AND FORT ERIE PUBLIC BRIDGE AUTHORITY GEC 2020-2023
BRIDGE PIER REHABILITATION

PIER B - PLAN, EAST & NORTH ELEVATIONS

Designed:	RLL	Drawn:	KLW	Checked:	SFD	Date:	01-22-2021

Project No:	30900145
WBS:	30900145
Sheet No.	11 OF 37
Dwg. No.	S-100

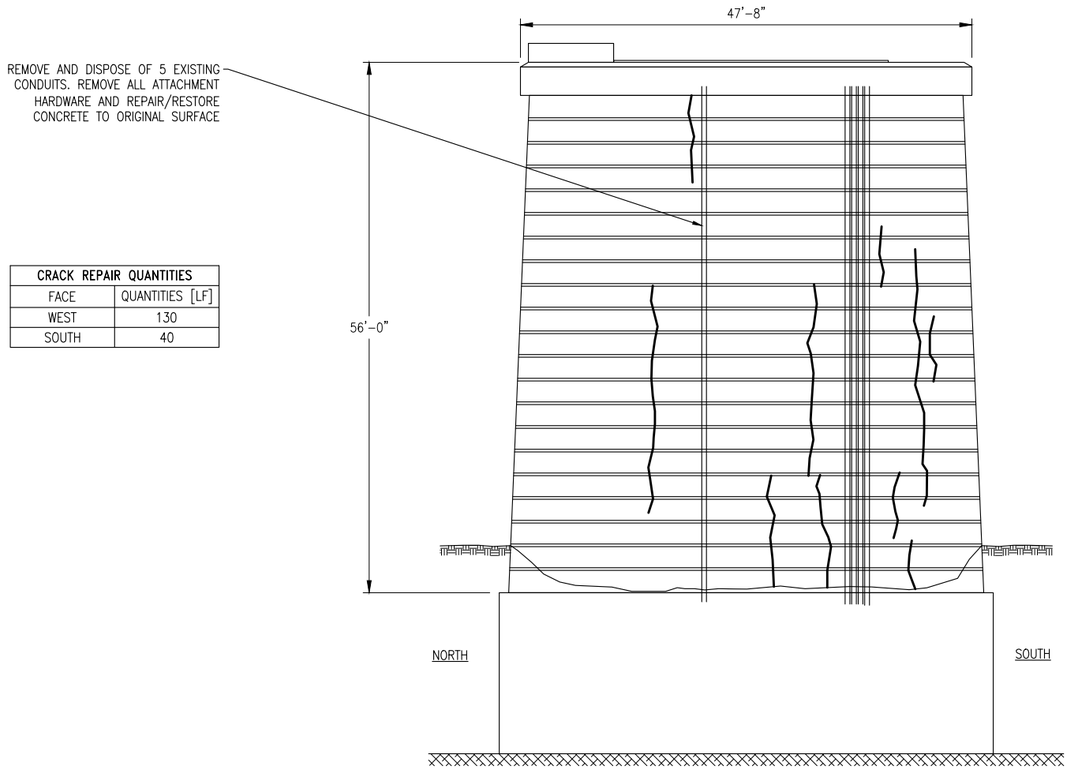

PIER B – WEST ELEVATION

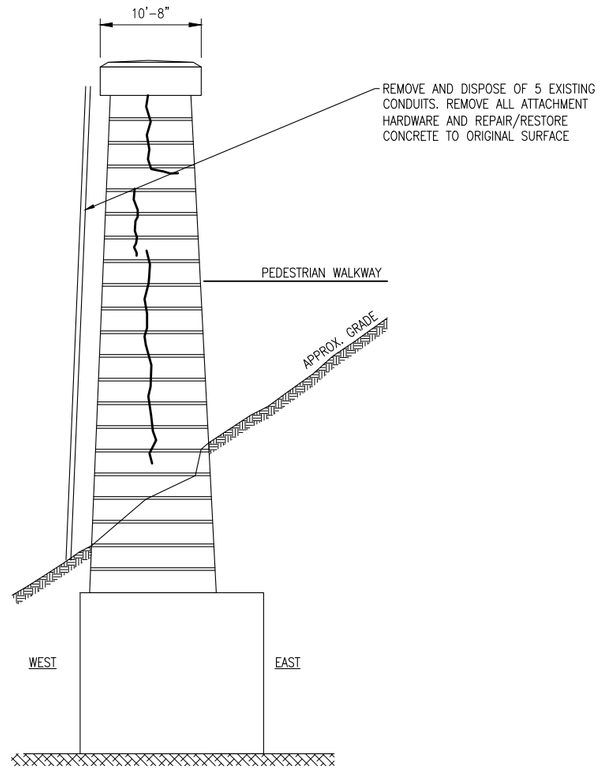

PIER B – SOUTH ELEVATION

CRACK REPAIR QUANTITIES	
FACE	QUANTITIES [LF]
WEST	130
SOUTH	40

LEGEND

ITEM 700 – CRACK REPAIR

16 0 16

SCALE: 1/16"=1'-0"

K. J. YUSEK 100179096 PROVINCE OF ONTARIO

FILE NAME:

THESE DESIGN DOCUMENTS ARE PREPARED SOLELY FOR THE USE BY THE PARTY WITH WHOM THE DESIGN PROFESSIONAL HAS ENTERED INTO A CONTRACT AND THERE ARE NO REPRESENTATIONS OF ANY KIND MADE BY THE DESIGN PROFESSIONAL TO ANY PARTY WITH WHOM THE DESIGN PROFESSIONAL HAS NOT ENTERED INTO A CONTRACT

No.	Revisions	Date	By	No.	Revisions Cont.	Date	By

BUFFALO AND FORT ERIE PUBLIC BRIDGE AUTHORITY
BUFFALO AND FORT ERIE PUBLIC BRIDGE AUTHORITY
100 QUEEN STREET
FORT ERIE, ON L2A 3S6 CANADA

wsp
50 Lakefront Boulevard
Suite 111
Buffalo, NY 14202

STATE OF NEW YORK – JOSEPH F. DOMBROWSKI – 093615 – LICENSED PROFESSIONAL ENGINEER – 02/25/2021

BUFFALO AND FORT ERIE PUBLIC BRIDGE AUTHORITY GEC 2020-2023
BRIDGE PIER REHABILITATION

PIER B - WEST & SOUTH ELEVATIONS

Designed:	RLL	Drawn:	KLW	Checked:	SFD	Date:	01-22-2021

Project No:	30900145
WBS:	30900145
Sheet No.	12 OF 37
Dwg. No.	S-101

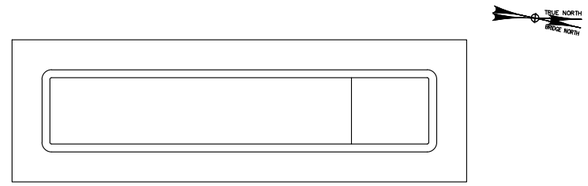

PIER A – PLAN

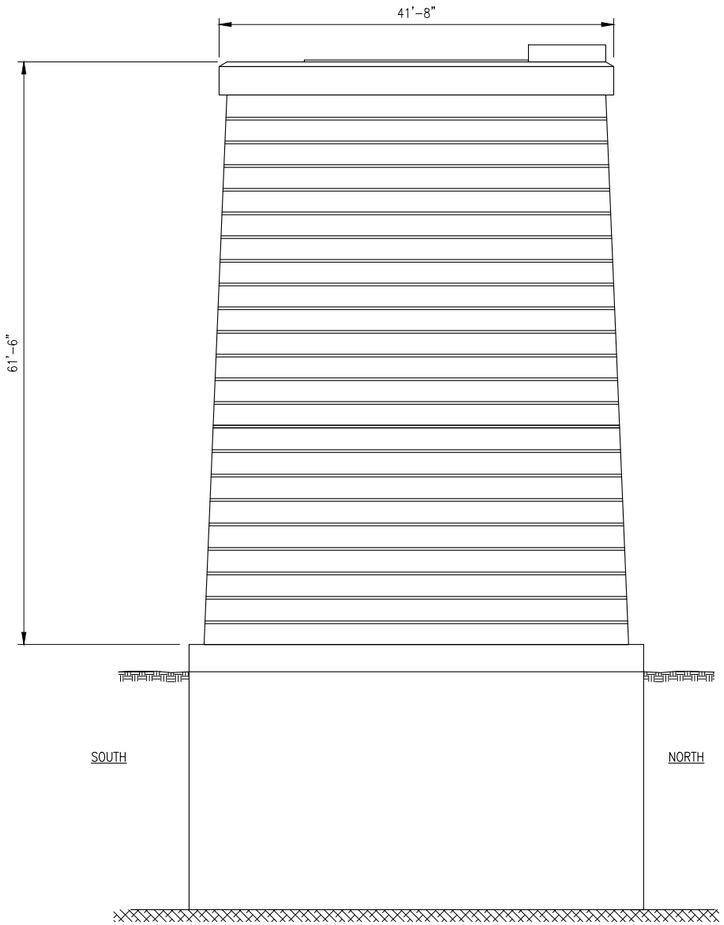

PIER A – EAST ELEVATION

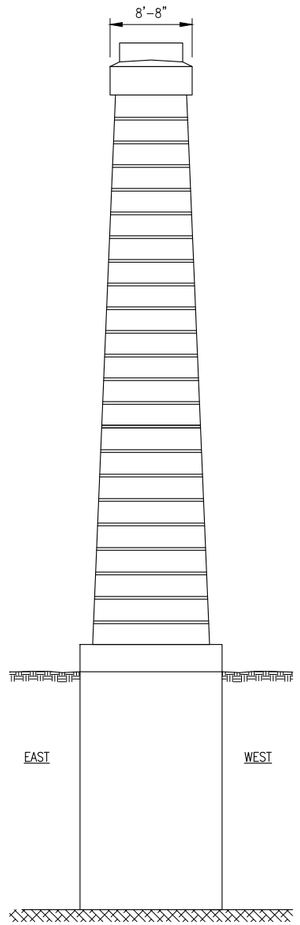

PIER A – NORTH ELEVATION

LEGEND

ITEM 700 – CRACK REPAIR

LICENSED PROFESSIONAL ENGINEER
K. J. YUSEK
100179098
PROVINCE OF ONTARIO

16 0 16

SCALE: 1/16"=1'-0"

FILE NAME:

THESE DESIGN DOCUMENTS ARE PREPARED SOLELY FOR THE USE BY THE PARTY WITH WHOM THE DESIGN PROFESSIONAL HAS ENTERED INTO A CONTRACT AND THERE ARE NO REPRESENTATIONS OF ANY KIND MADE BY THE DESIGN PROFESSIONAL TO ANY PARTY WITH WHOM THE DESIGN PROFESSIONAL HAS NOT ENTERED INTO A CONTRACT

No.	Revisions	Date	By	No.	Revisions Cont.	Date	By

BUFFALO AND FORT ERIE PUBLIC BRIDGE AUTHORITY

BUFFALO AND FORT ERIE PUBLIC BRIDGE AUTHORITY
100 QUEEN STREET
FORT ERIE, ON L2A 3S6 CANADA

wsp
50 Lakefront Boulevard
Suite 111
Buffalo, NY 14202

STATE OF NEW YORK
SHIRLEY P. DONOVAN
LICENSED PROFESSIONAL ENGINEER
02/25/2021

BUFFALO AND FORT ERIE PUBLIC BRIDGE AUTHORITY GEC 2020-2023
BRIDGE PIER REHABILITATION

PIER A - PLAN, EAST & NORTH ELEVATIONS

Designed: RLL | Drawn: KLW | Checked: SFD | Date: 01-22-2021

Project No: 30900145
WBS: 30900145
Sheet No. 13 OF 37
Dwg. No. S-102

SPALL REPAIR QUANTITIES	
SPALL	AREA [SF]
S-01-PAW	24.2
S-03-PAW	2.9
S-04-PAW	4.3
S-05-PAW	32.5
S-06-PAW	5.5
S-07-PAW	4.4
S-08-PAW	3.4
S-09-PAW	1.0
S-10-PAW	10.8
S-12-PAW	3.3
S-13-PAW	1.5
TOTAL	69.6

CRACK REPAIR QUANTITIES	
FACE	QUANTITIES [LF]
WEST	10
SOUTH	–

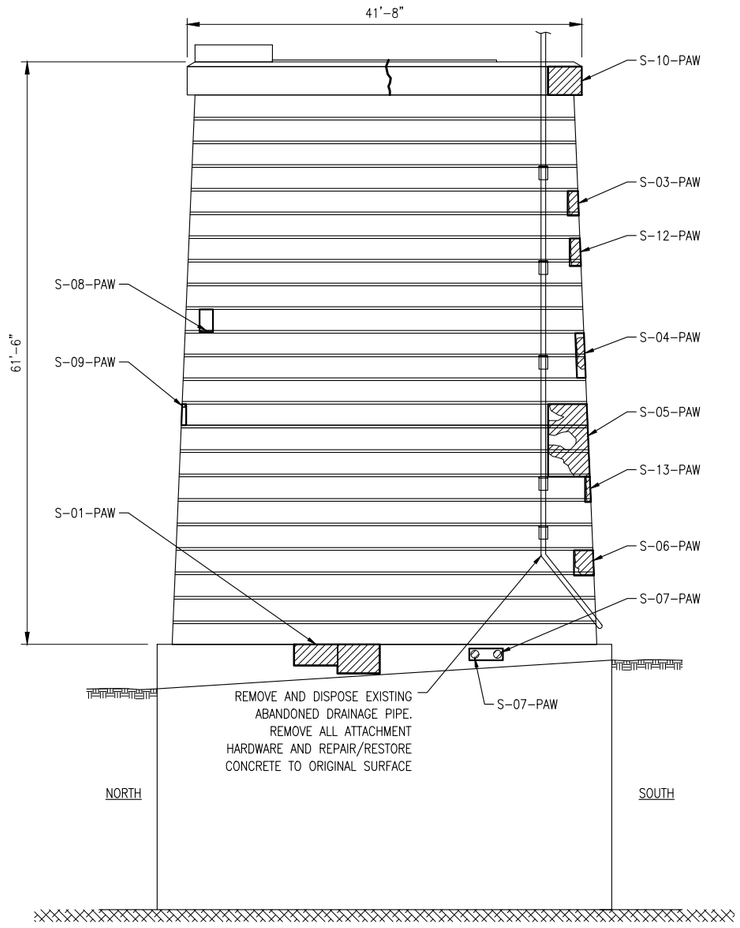

PIER A – WEST ELEVATION

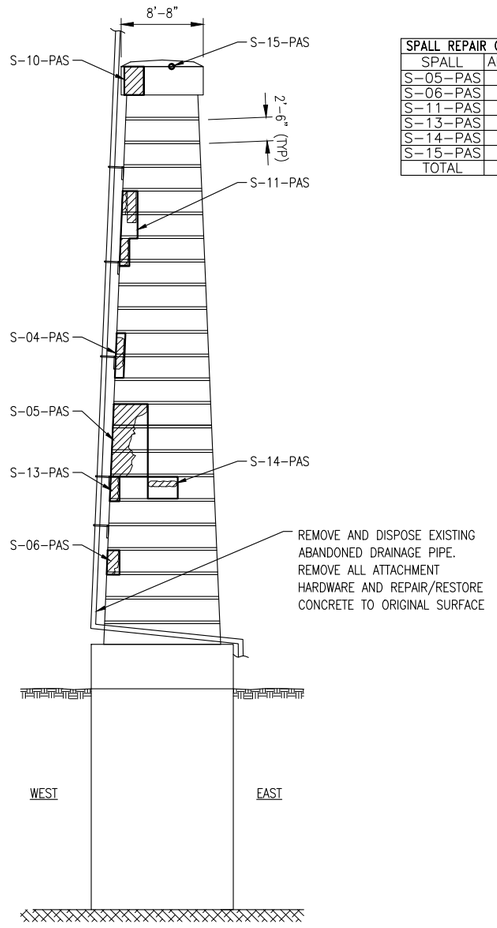

PIER A – SOUTH ELEVATION

SPALL REPAIR QUANTITIES	
SPALL	AREA [SF]
S-05-PAS	28.7
S-06-PAS	3.4
S-11-PAS	11.3
S-13-PAS	2.5
S-14-PAS	7.3
S-15-PAS	0.3
TOTAL	53.5

LEGEND

- ITEM 600 – LIMITS OF CONCRETE REPAIR
- CONCRETE SPALLS IDENTIFIED IN 2020 INSPECTION
- ITEM 700 – CRACK REPAIR

16 0 16

SCALE: 1/16"=1'-0"

FILE NAME:

THESE DESIGN DOCUMENTS ARE PREPARED SOLELY FOR THE USE BY THE PARTY WITH WHOM THE DESIGN PROFESSIONAL HAS ENTERED INTO A CONTRACT AND THERE ARE NO REPRESENTATIONS OF ANY KIND MADE BY THE DESIGN PROFESSIONAL TO ANY PARTY WITH WHOM THE DESIGN PROFESSIONAL HAS NOT ENTERED INTO A CONTRACT

No.	Revisions	Date	By	No.	Revisions Cont.	Date	By

BUFFALO AND FORT ERIE PUBLIC BRIDGE AUTHORITY

BUFFALO AND FORT ERIE PUBLIC BRIDGE AUTHORITY
100 QUEEN STREET
FORT ERIE, ON L2A 3S6 CANADA

wsp
50 Lakefront Boulevard
Suite 111
Buffalo, NY 14202

BUFFALO AND FORT ERIE PUBLIC BRIDGE AUTHORITY GEC 2020-2023
BRIDGE PIER REHABILITATION

PIER A - WEST & SOUTH ELEVATIONS

Designed: RLL | Drawn: KLW | Checked: SFD | Date: 01-22-2021

Project No: 30900145
WBS: 30900145
Sheet No. 14 OF 37
Dwg. No. S-103

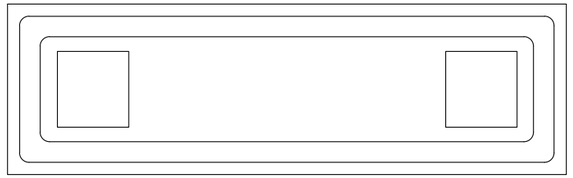

PIER 1 – PLAN

SPALL REPAIR QUANTITIES	
SPALL	AREA [SF]
S-08-P1E	3.6
S-09-P1E	1.4
S-10-P1E	4.6
S-11-P1E	11.5
S-14-P1E	6.0
S-31-P1E	76.1
TOTAL	103.2

CRACK REPAIR QUANTITIES	
FACE	QUANTITIES [LF]
EAST	40
NORTH	10

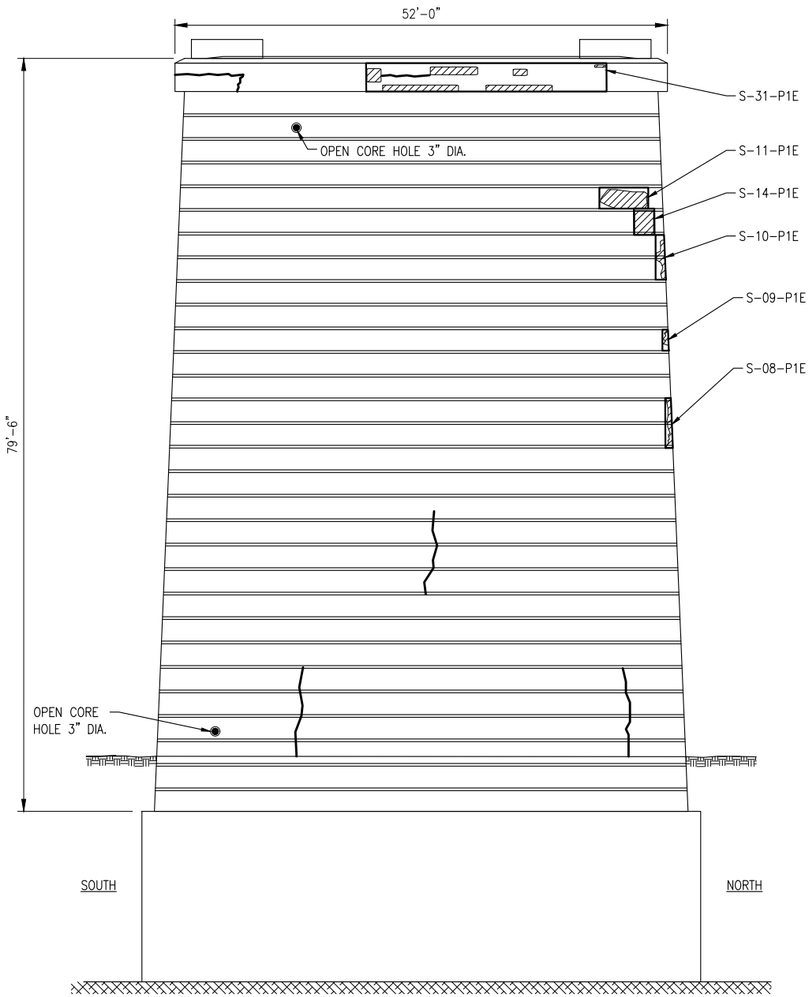

PIER 1 – EAST ELEVATION

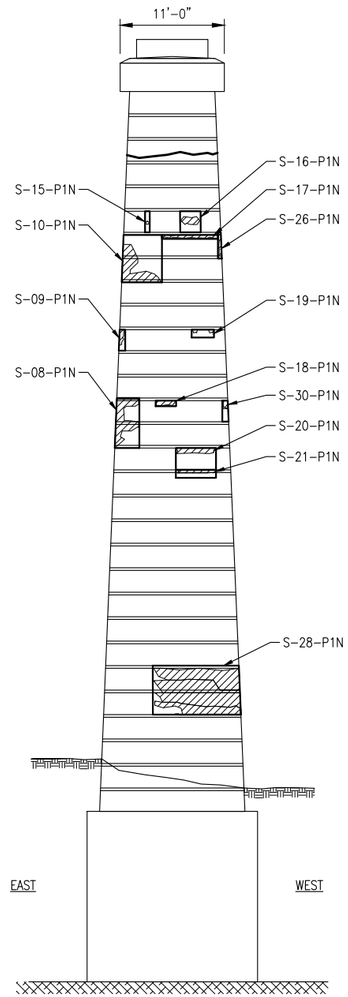

PIER 1 – NORTH ELEVATION

SPALL REPAIR QUANTITIES	
SPALL	AREA [SF]
S-08-P1N	13.1
S-09-P1N	1.4
S-10-P1N	20.7
S-15-P1N	1.1
S-16-P1N	4.8
S-17-P1N	2.4
S-18-P1N	1.3
S-19-P1N	2.0
S-20-P1N	9.8
S-21-P1N	3.5
S-26-P1N	1.0
S-28-P1N	47.5
S-30-P1N	1.4
TOTAL	110.0

LEGEND

- ITEM 600 – LIMITS OF CONCRETE REPAIR
- CONCRETE SPALLS IDENTIFIED IN 2020 INSPECTION
- ITEM 700 – CRACK REPAIR

16 0 16

SCALE: 1/16"=1'-0"

FILE NAME:

THESE DESIGN DOCUMENTS ARE PREPARED SOLELY FOR THE USE BY THE PARTY WITH WHOM THE DESIGN PROFESSIONAL HAS ENTERED INTO A CONTRACT AND THERE ARE NO REPRESENTATIONS OF ANY KIND MADE BY THE DESIGN PROFESSIONAL TO ANY PARTY WITH WHOM THE DESIGN PROFESSIONAL HAS NOT ENTERED INTO A CONTRACT

No.	Revisions	Date	By

No.	Revisions Cont.	Date	By

BUFFALO AND FORT ERIE PUBLIC BRIDGE AUTHORITY
BUFFALO AND FORT ERIE PUBLIC BRIDGE AUTHORITY
100 QUEEN STREET
FORT ERIE, ON L2A 3S6 CANADA

wsp
50 Lakefront Boulevard
Suite 111
Buffalo, NY 14202

02/25/2021

BUFFALO AND FORT ERIE PUBLIC BRIDGE AUTHORITY GEC 2020-2023
BRIDGE PIER REHABILITATION

PIER 1 - PLAN, EAST & NORTH ELEVATIONS

Designed:	RLL	Drawn:	KLW	Checked:	SFD	Date:	01-22-2021

Project No:	30900145
WBS:	30900145
Sheet No.	15 OF 37
Dwg. No.	S-104

SPALL REPAIR QUANTITIES	
SPALL	AREA [SF]
S-01-P1W	0.7
S-04-P1W	19.3
S-09-P1W	20.9
S-12-P1W	21.0
S-19-P1W	156.2
S-29-P1W	1.3
S-42-P1W	9.8
S-44-P1W	22.6
S-46-P1W	3.3
S-47-P1W	1.5
S-48-P1W	15.9
S-49-P1W	67.4
S-51-P1W	7.8
TOTAL	347.7

CRACK REPAIR QUANTITIES	
FACE	QUANTITIES [LF]
WEST	110
SOUTH	20

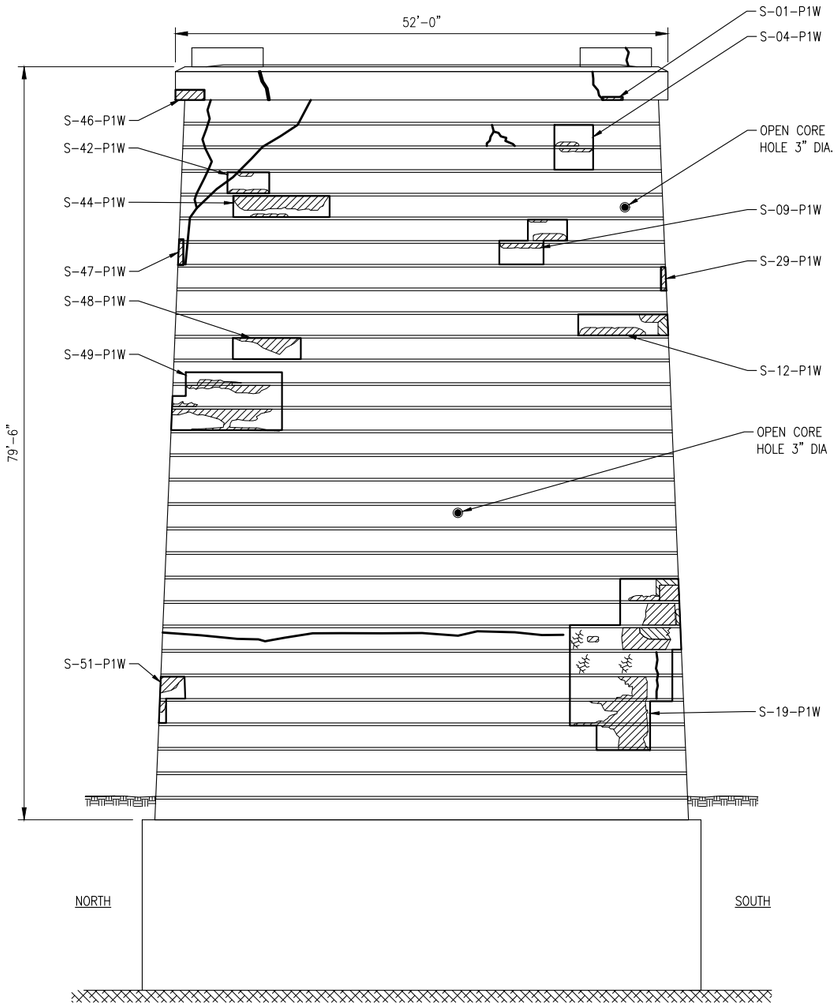

PIER 1 – WEST ELEVATION

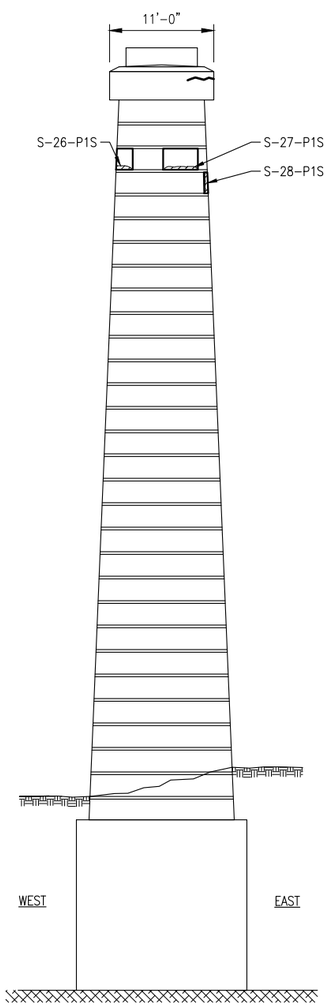

PIER 1 – SOUTH ELEVATION

SPALL REPAIR QUANTITIES	
SPALL	AREA [SF]
S-26-P1S	3.8
S-27-P1S	8.1
S-28-P1S	0.9
TOTAL	12.8

LEGEND

- ITEM 600 – LIMITS OF CONCRETE REPAIR
- CONCRETE SPALLS IDENTIFIED IN 2020 INSPECTION
- ITEM 700 – CRACK REPAIR

16 0 16

SCALE: 1/16"=1'-0"

FILE NAME:

THESE DESIGN DOCUMENTS ARE PREPARED SOLELY FOR THE USE BY THE PARTY WITH WHOM THE DESIGN PROFESSIONAL HAS ENTERED INTO A CONTRACT AND THERE ARE NO REPRESENTATIONS OF ANY KIND MADE BY THE DESIGN PROFESSIONAL TO ANY PARTY WITH WHOM THE DESIGN PROFESSIONAL HAS NOT ENTERED INTO A CONTRACT

No.	Revisions	Date	By

No.	Revisions Cont.	Date	By

BUFFALO AND FORT ERIE PUBLIC BRIDGE AUTHORITY
BUFFALO AND FORT ERIE PUBLIC BRIDGE AUTHORITY
100 QUEEN STREET
FORT ERIE, ON L2A 3S6 CANADA

wsp
50 Lakefront Boulevard
Suite 111
Buffalo, NY 14202

02/25/2021

BUFFALO AND FORT ERIE PUBLIC BRIDGE AUTHORITY GEC 2020-2023
BRIDGE PIER REHABILITATION

PIER 1 - WEST & SOUTH ELEVATIONS

Designed: RLL | Drawn: KLW | Checked: SFD | Date: 01-22-2021

Project No: 30900145
WBS: 30900145
Sheet No. 16 OF 37
Dwg. No. S-105

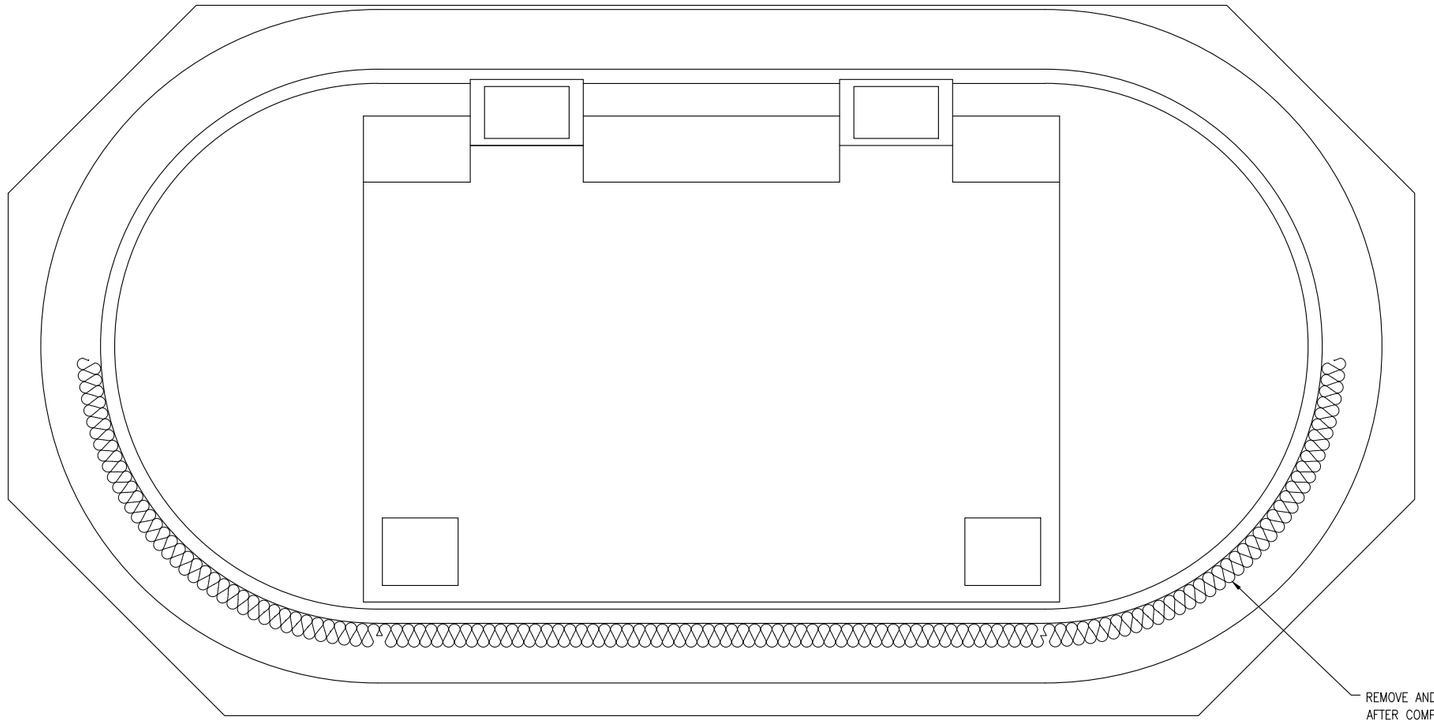

PIER 2 – PLAN

LEGEND

ITEM 700 – CRACK REPAIR

8 0 8

SCALE: 3/32" = 1'-0"

FILE NAME:

THESE DESIGN DOCUMENTS ARE PREPARED SOLELY FOR THE USE BY THE PARTY WITH WHOM THE DESIGN PROFESSIONAL HAS ENTERED INTO A CONTRACT AND THERE ARE NO REPRESENTATIONS OF ANY KIND MADE BY THE DESIGN PROFESSIONAL TO ANY PARTY WITH WHOM THE DESIGN PROFESSIONAL HAS NOT ENTERED INTO A CONTRACT

No.	Revisions	Date	By	No.	Revisions Cont.	Date	By

BUFFALO AND FORT ERIE PUBLIC BRIDGE AUTHORITY
BUFFALO AND FORT ERIE PUBLIC BRIDGE AUTHORITY
100 QUEEN STREET
FORT ERIE, ON L2A 3S6 CANADA

wsp
50 Lakefront Boulevard
Suite 111
Buffalo, NY 14202

02/25/2021

BUFFALO AND FORT ERIE PUBLIC BRIDGE AUTHORITY GEC 2020-2023
BRIDGE PIER REHABILITATION

PIER 2 - PLAN

Designed:	RLL	Drawn:	KLW	Checked:	SFD	Date:	01-22-2021

Project No:	30900145
WBS:	30900145
Sheet No.	17 OF 37
Dwg. No.	S-106

CRACK REPAIR QUANTITIES	
FACE	QUANTITIES [LF]
EAST	20

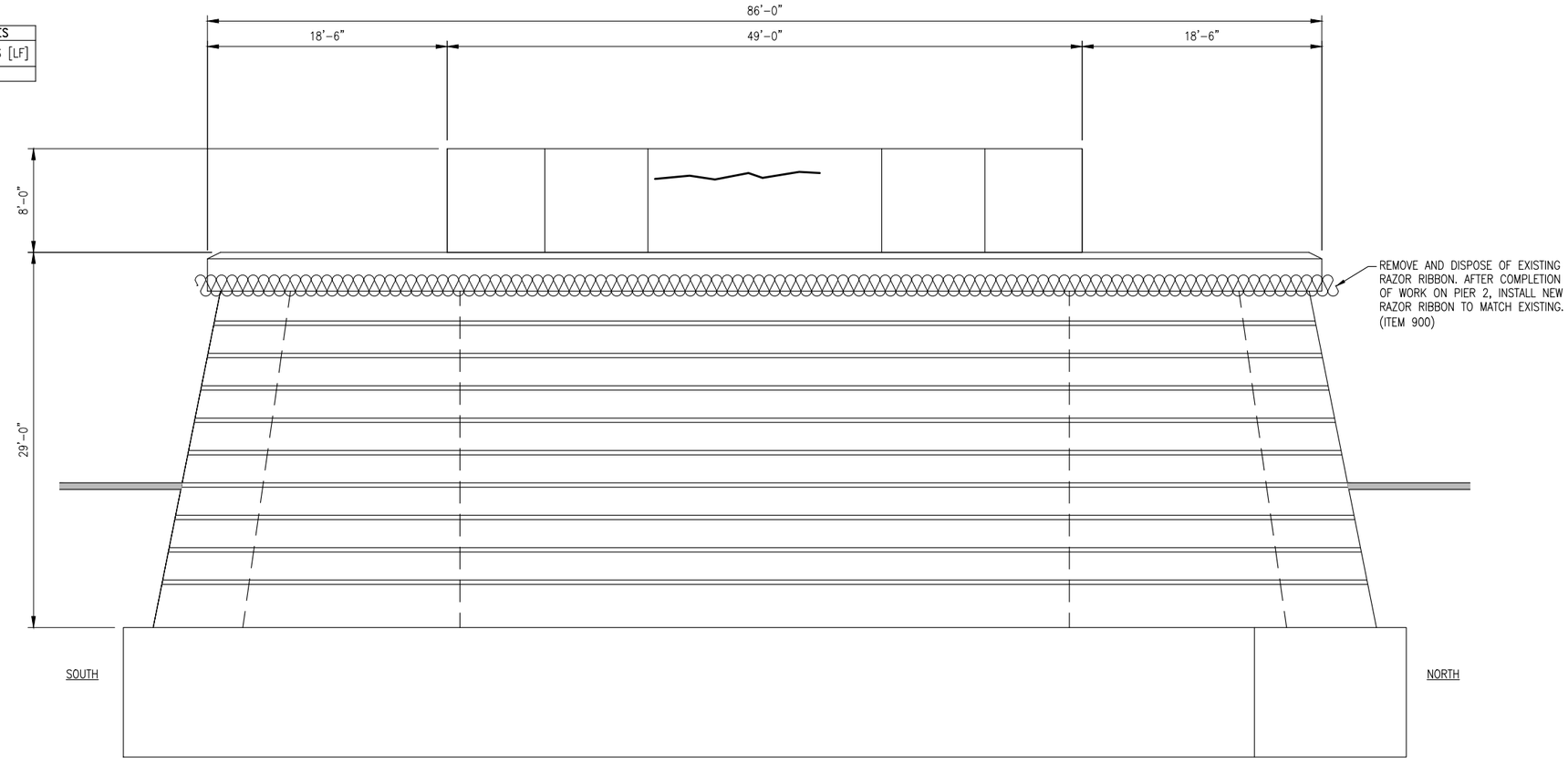

PIER 2 – EAST ELEVATION

LEGEND

ITEM 700 – CRACK REPAIR

8 0 8

SCALE: 3/32" = 1'-0"

THESE DESIGN DOCUMENTS ARE PREPARED SOLELY FOR THE USE BY THE PARTY WITH WHOM THE DESIGN PROFESSIONAL HAS ENTERED INTO A CONTRACT AND THERE ARE NO REPRESENTATIONS OF ANY KIND MADE BY THE DESIGN PROFESSIONAL TO ANY PARTY WITH WHOM THE DESIGN PROFESSIONAL HAS NOT ENTERED INTO A CONTRACT

No.	Revisions	Date	By	No.	Revisions Cont.	Date	By

BUFFALO AND FORT ERIE PUBLIC BRIDGE AUTHORITY
100 QUEEN STREET
FORT ERIE, ON L2A 3S6 CANADA

wsp
50 Lakefront Boulevard
Suite 111
Buffalo, NY 14202

BUFFALO AND FORT ERIE PUBLIC BRIDGE AUTHORITY GEC 2020-2023
BRIDGE PIER REHABILITATION

PIER 2 - EAST ELEVATION

Designed: RLL | Drawn: KLW | Checked: SFD | Date: 01-22-2021

Project No: 30900145
WBS: 30900145
Sheet No. 18 OF 37
Dwg No. S-107

FILE NAME:

CRACK REPAIR QUANTITIES	
FACE	QUANTITIES [LF]
WEST	30

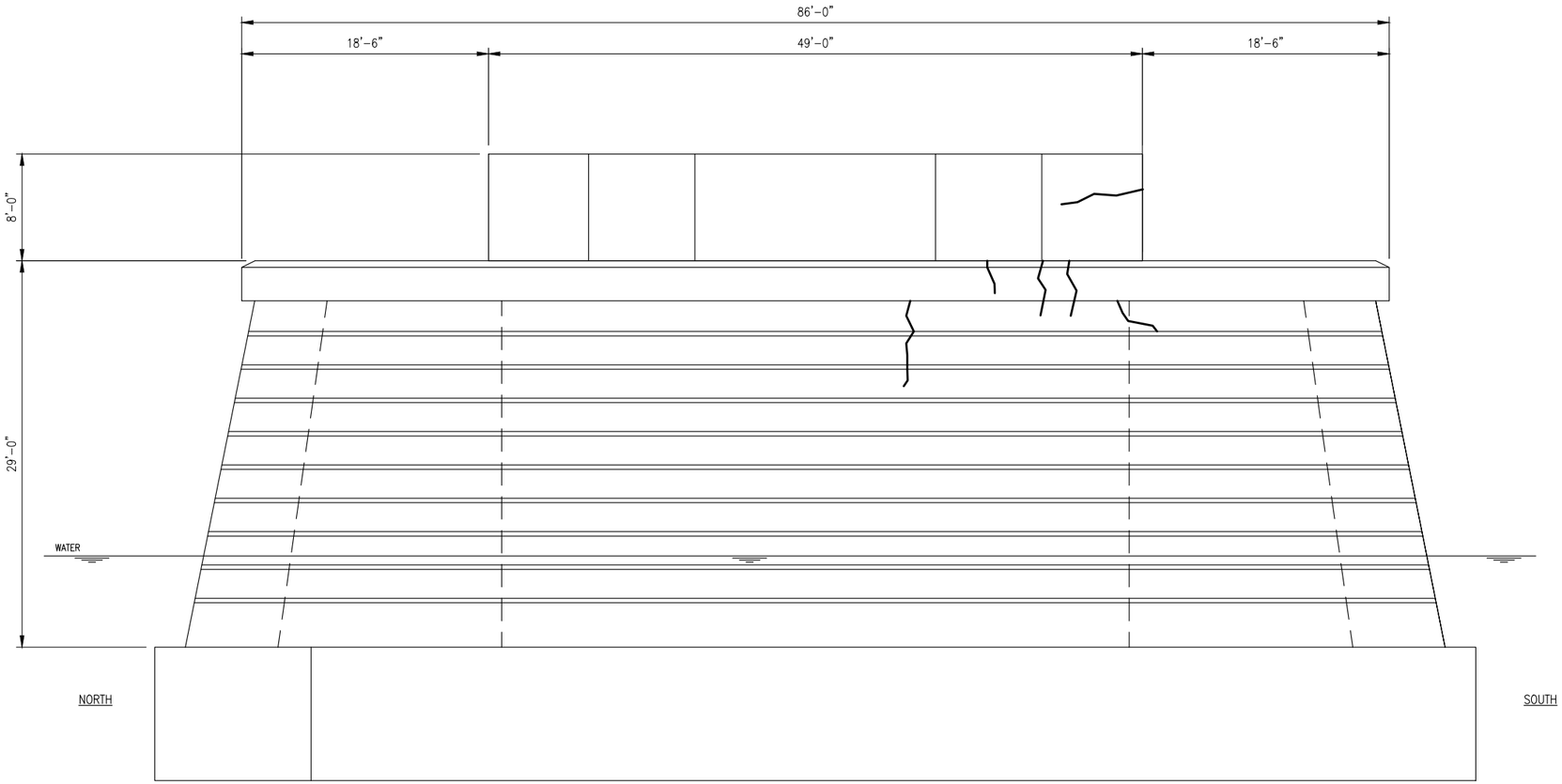

PIER 2 – WEST ELEVATION

LEGEND

ITEM 700 – CRACK REPAIR

SCALE: 3/32" = 1'-0"

FILE NAME:

THESE DESIGN DOCUMENTS ARE PREPARED SOLELY FOR THE USE BY THE PARTY WITH WHOM THE DESIGN PROFESSIONAL HAS ENTERED INTO A CONTRACT AND THERE ARE NO REPRESENTATIONS OF ANY KIND MADE BY THE DESIGN PROFESSIONAL TO ANY PARTY WITH WHOM THE DESIGN PROFESSIONAL HAS NOT ENTERED INTO A CONTRACT

No.	Revisions	Date	By

No.	Revisions Cont.	Date	By

BUFFALO AND FORT ERIE PUBLIC BRIDGE AUTHORITY
BUFFALO AND FORT ERIE PUBLIC BRIDGE AUTHORITY
100 QUEEN STREET
FORT ERIE, ON L2A 3S6 CANADA

wsp
50 Lakefront Boulevard
Suite 111
Buffalo, NY 14202

BUFFALO AND FORT ERIE PUBLIC BRIDGE AUTHORITY GEC 2020-2023
BRIDGE PIER REHABILITATION

PIER 2 - WEST ELEVATION

Designed: RLL | Drawn: KLW | Checked: SFD | Date: 01-22-2021

Project No: 30900145
WBS: 30900145
Sheet No. 19 OF 37
Dwg. No. S-108

CRACK REPAIR QUANTITIES	
FACE	QUANTITIES [LF]
NORTH	–
SOUTH	10

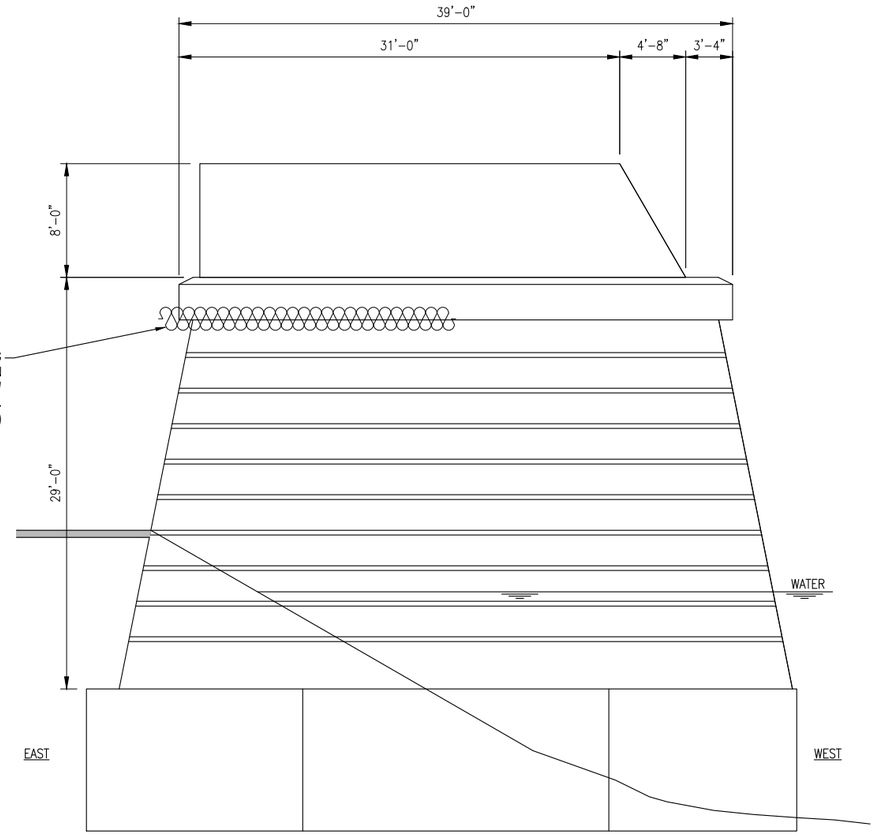

PIER 2 – NORTH ELEVATION

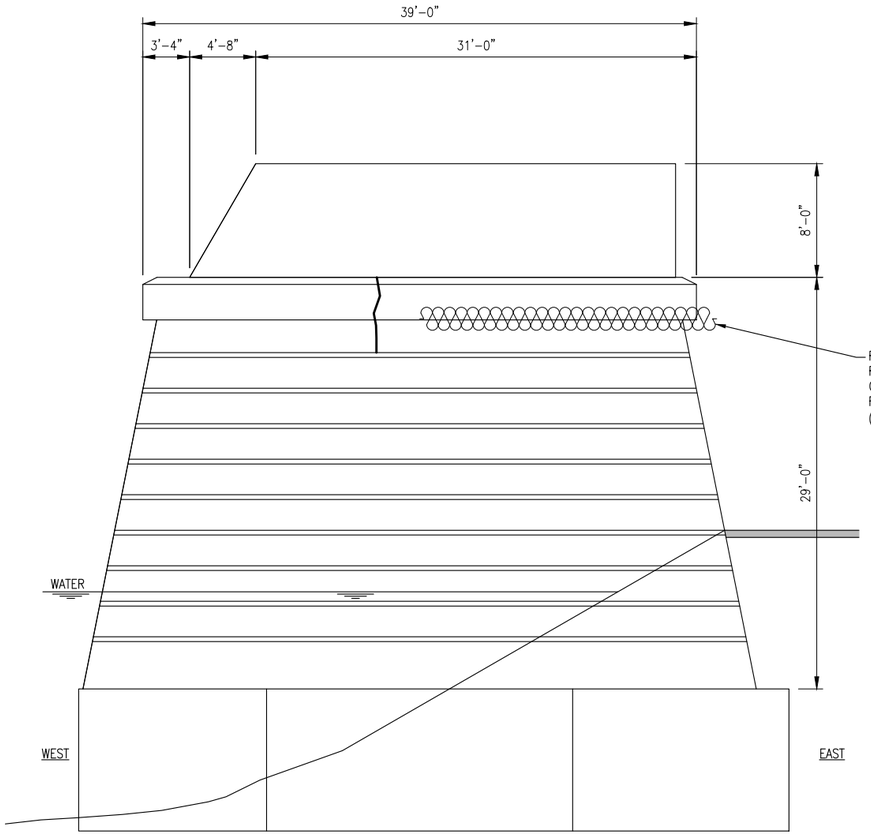

PIER 2 – SOUTH ELEVATION

LEGEND

ITEM 700 – CRACK REPAIR

8 0 8

SCALE: 3/32" = 1'-0"

THESE DESIGN DOCUMENTS ARE PREPARED SOLELY FOR THE USE BY THE PARTY WITH WHOM THE DESIGN PROFESSIONAL HAS ENTERED INTO A CONTRACT AND THERE ARE NO REPRESENTATIONS OF ANY KIND MADE BY THE DESIGN PROFESSIONAL TO ANY PARTY WITH WHOM THE DESIGN PROFESSIONAL HAS NOT ENTERED INTO A CONTRACT

FILE NAME:

No.	Revisions	Date	By

No.	Revisions Cont.	Date	By

BUFFALO AND FORT ERIE PUBLIC BRIDGE AUTHORITY
BUFFALO AND FORT ERIE PUBLIC BRIDGE AUTHORITY
100 QUEEN STREET
FORT ERIE, ON L2A 3S6 CANADA

WSP
50 Lakefront Boulevard
Suite 111
Buffalo, NY 14202

BUFFALO AND FORT ERIE PUBLIC BRIDGE AUTHORITY GEC 2020-2023
BRIDGE PIER REHABILITATION

PIER 2 - NORTH & SOUTH ELEVATIONS

Designed: RLL | Drawn: KLW | Checked: SFD | Date: 01-22-2021

Project No:	30900145
WBS:	30900145
Sheet No.	20 OF 37
Dwg. No.	S-109

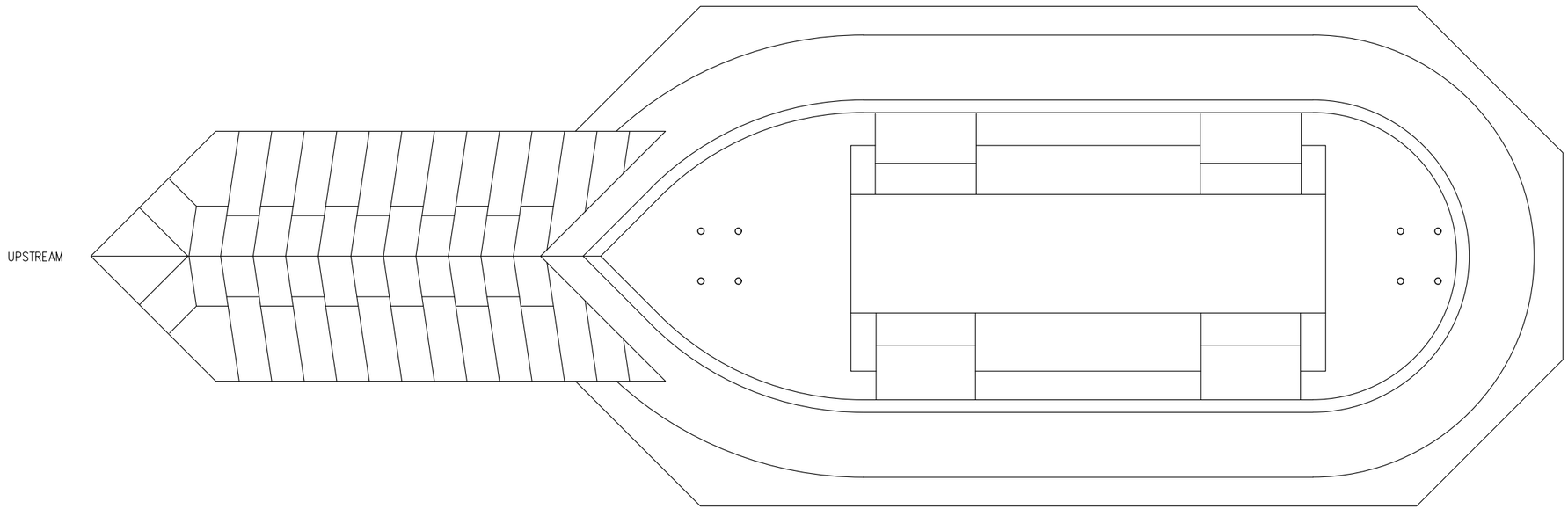

PIER 3 – PLAN

SCALE: 3/32" = 1'-0"

FILE NAME:

THESE DESIGN DOCUMENTS ARE PREPARED SOLELY FOR THE USE BY THE PARTY WITH WHOM THE DESIGN PROFESSIONAL HAS ENTERED INTO A CONTRACT AND THERE ARE NO REPRESENTATIONS OF ANY KIND MADE BY THE DESIGN PROFESSIONAL TO ANY PARTY WITH WHOM THE DESIGN PROFESSIONAL HAS NOT ENTERED INTO A CONTRACT

No.	Revisions	Date	By	No.	Revisions Cont.	Date	By

BUFFALO AND FORT ERIE PUBLIC BRIDGE AUTHORITY

BUFFALO AND FORT ERIE PUBLIC BRIDGE AUTHORITY
100 QUEEN STREET
FORT ERIE, ON L2A 3S6 CANADA

wsp
50 Lakefront Boulevard
Suite 111
Buffalo, NY 14202

02/25/2021

BUFFALO AND FORT ERIE PUBLIC BRIDGE AUTHORITY GEC 2020-2023
BRIDGE PIER REHABILITATION

PIER 3 - PLAN

Designed: RLL | Drawn: KLW | Checked: SFD | Date: 01-22-2021

Project No:	30900145
WBS:	30900145
Sheet No.	21 OF 37
Dwg. No.	S-110

CRACK REPAIR QUANTITIES	
FACE	QUANTITIES [LF]
EAST	5

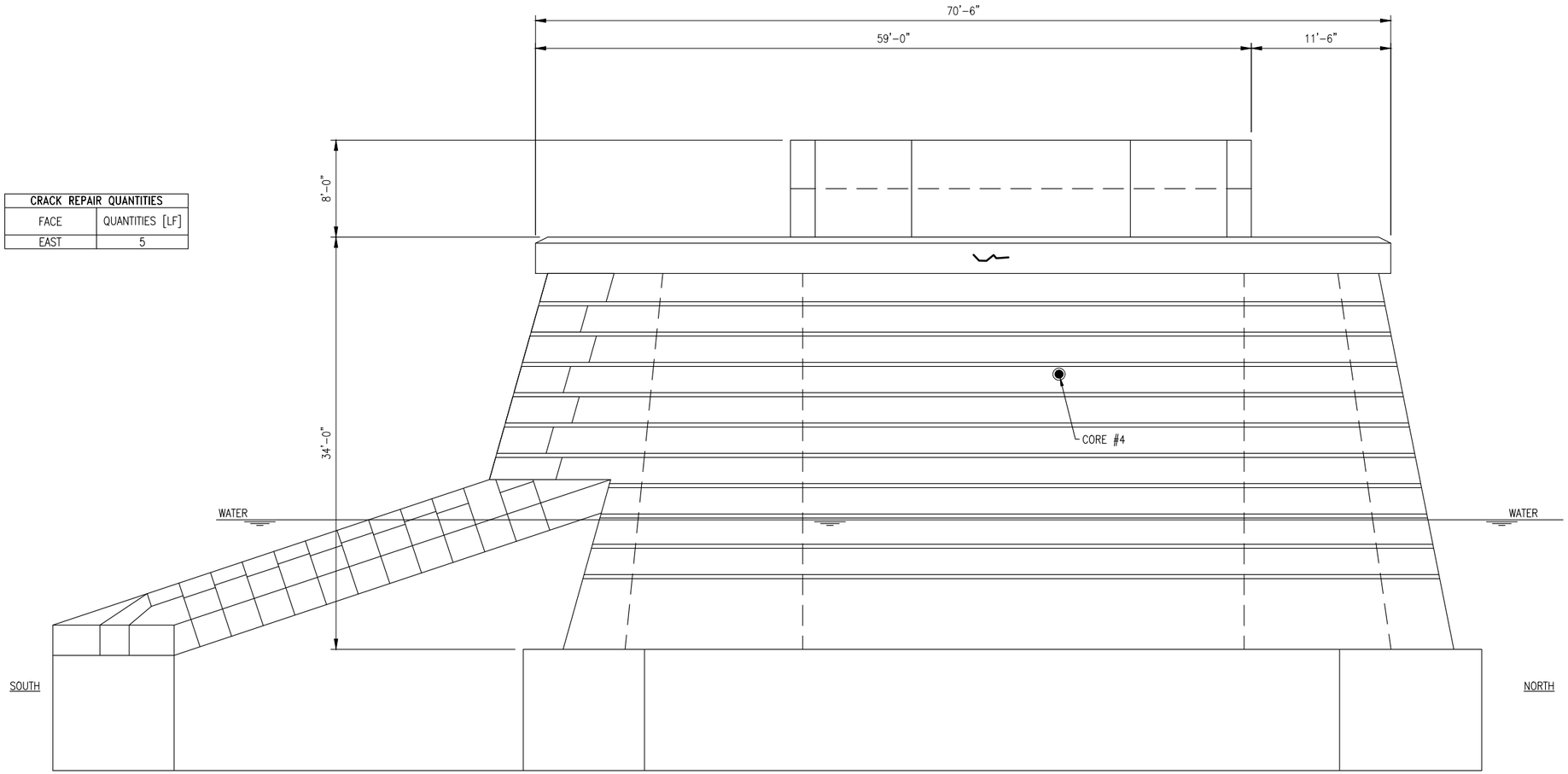

PIER 3 – EAST ELEVATION

LEGEND

ITEM 700 – CRACK REPAIR

SCALE: 3/32" = 1'-0"

THESE DESIGN DOCUMENTS ARE PREPARED SOLELY FOR THE USE BY THE PARTY WITH WHOM THE DESIGN PROFESSIONAL HAS ENTERED INTO A CONTRACT AND THERE ARE NO REPRESENTATIONS OF ANY KIND MADE BY THE DESIGN PROFESSIONAL TO ANY PARTY WITH WHOM THE DESIGN PROFESSIONAL HAS NOT ENTERED INTO A CONTRACT

No.	Revisions	Date	By

No.	Revisions Cont.	Date	By

BUFFALO AND FORT ERIE PUBLIC BRIDGE AUTHORITY
BUFFALO AND FORT ERIE PUBLIC BRIDGE AUTHORITY
100 QUEEN STREET
FORT ERIE, ON L2A 3S6 CANADA

wsp
50 Lakefront Boulevard
Suite 111
Buffalo, NY 14202

02/25/2021

BUFFALO AND FORT ERIE PUBLIC BRIDGE AUTHORITY GEC 2020-2023
BRIDGE PIER REHABILITATION

PIER 3 - EAST ELEVATION

Designed: RLL | Drawn: KLW | Checked: SFD | Date: 01-22-2021

Project No:	30900145
WBS:	30900145
Sheet No.	22 OF 37
Dwg. No.	S-111

FILE NAME:

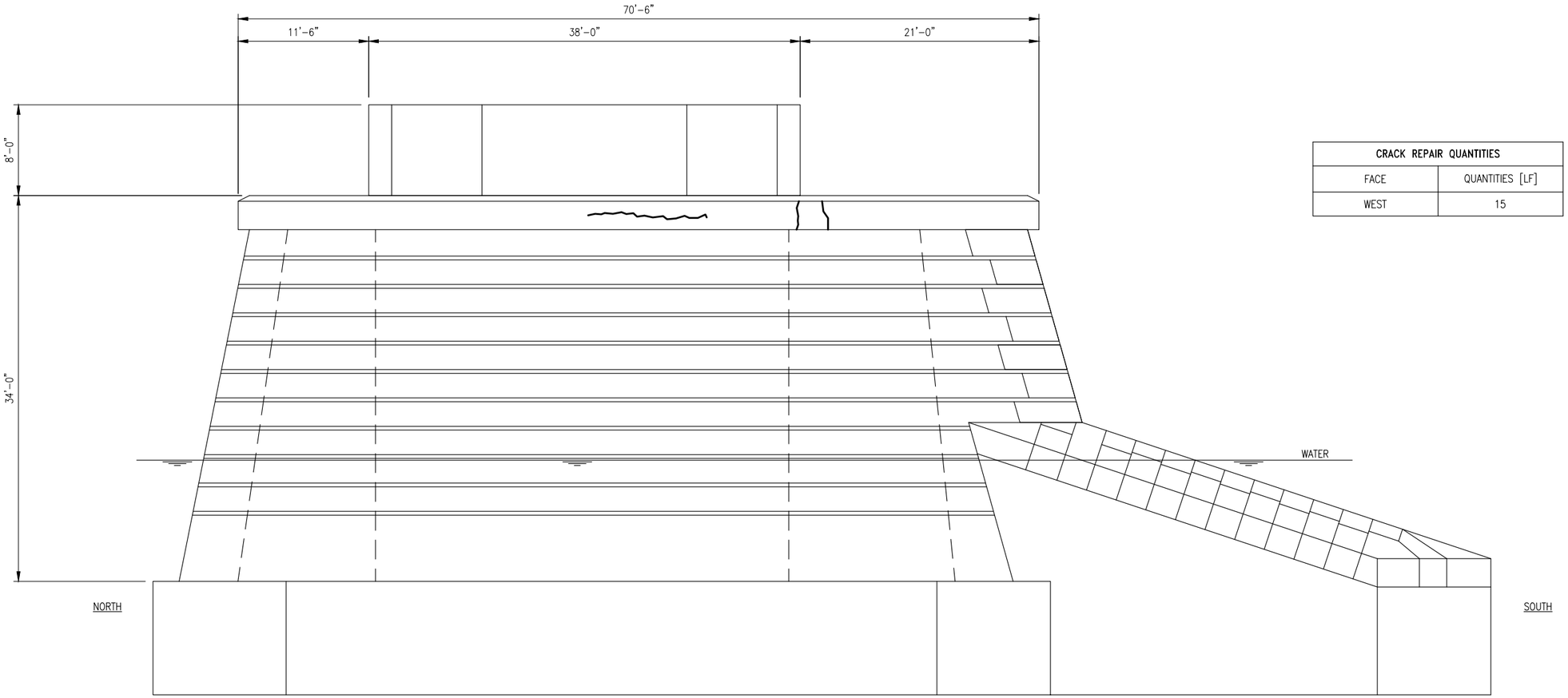

CRACK REPAIR QUANTITIES	
FACE	QUANTITIES [LF]
WEST	15

PIER 3 – WEST ELEVATION

LEGEND

ITEM 700 – CRACK REPAIR

SCALE: 3/32"=1'-0"

THESE DESIGN DOCUMENTS ARE PREPARED SOLELY FOR THE USE BY THE PARTY WITH WHOM THE DESIGN PROFESSIONAL HAS ENTERED INTO A CONTRACT AND THERE ARE NO REPRESENTATIONS OF ANY KIND MADE BY THE DESIGN PROFESSIONAL TO ANY PARTY WITH WHOM THE DESIGN PROFESSIONAL HAS NOT ENTERED INTO A CONTRACT

FILE NAME:

No.	Revisions	Date	By	No.	Revisions Cont.	Date	By

BUFFALO AND FORT ERIE PUBLIC BRIDGE AUTHORITY
BUFFALO AND FORT ERIE PUBLIC BRIDGE AUTHORITY
100 QUEEN STREET
FORT ERIE, ON L2A 3S6 CANADA

50 Lakefront Boulevard
Suite 111
Buffalo, NY 14202

02/25/2021

BUFFALO AND FORT ERIE PUBLIC BRIDGE AUTHORITY GEC 2020-2023
BRIDGE PIER REHABILITATION

PIER 3 - WEST ELEVATION

Designed: RLL | Drawn: KLW | Checked: DFS | Date: 01-22-2021

Project No: 30900145
WBS: 30900145
Sheet No. 23 OF 37
Dwg. No. S-112

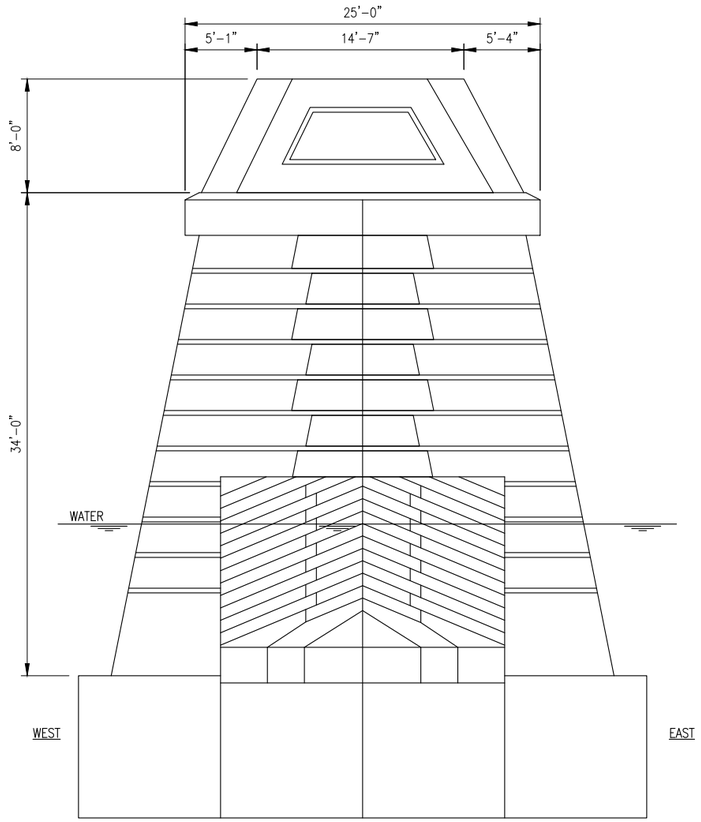

PIER 3 – SOUTH ELEVATION

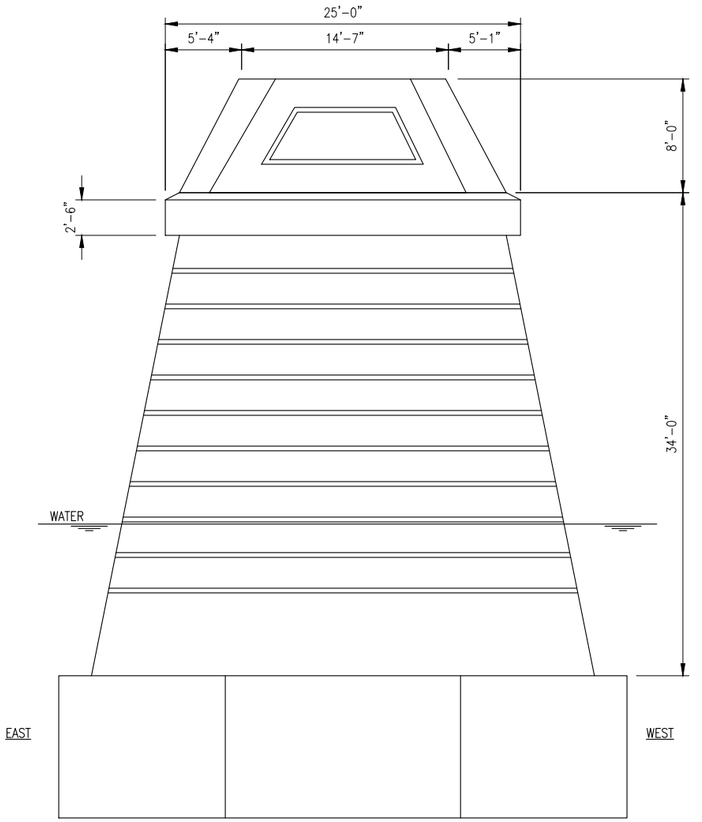

PIER 3 – NORTH ELEVATION

LEGEND

ITEM 700 – CRACK REPAIR

SCALE: 3/32" = 1'-0"

8 0 8

THESE DESIGN DOCUMENTS ARE PREPARED SOLELY FOR THE USE BY THE PARTY WITH WHOM THE DESIGN PROFESSIONAL HAS ENTERED INTO A CONTRACT AND THERE ARE NO REPRESENTATIONS OF ANY KIND MADE BY THE DESIGN PROFESSIONAL TO ANY PARTY WITH WHOM THE DESIGN PROFESSIONAL HAS NOT ENTERED INTO A CONTRACT

No.	Revisions	Date	By

No.	Revisions Cont.	Date	By

BUFFALO AND FORT ERIE PUBLIC BRIDGE AUTHORITY

BUFFALO AND FORT ERIE PUBLIC BRIDGE AUTHORITY
100 QUEEN STREET
FORT ERIE, ON L2A 3S6 CANADA

wsp
50 Lakefront Boulevard
Suite 111
Buffalo, NY 14202

BUFFALO AND FORT ERIE PUBLIC BRIDGE AUTHORITY GEC 2020-2023
BRIDGE PIER REHABILITATION

PIER 3 - NORTH & SOUTH ELEVATIONS

Designed:	RLL	Drawn:	KLW	Checked:	SFD	Date:	01-22-2021

Project No:	30900145
WBS:	30900145
Sheet No.	24 OF 37
Dwg. No.	S-113

FILE NAME:

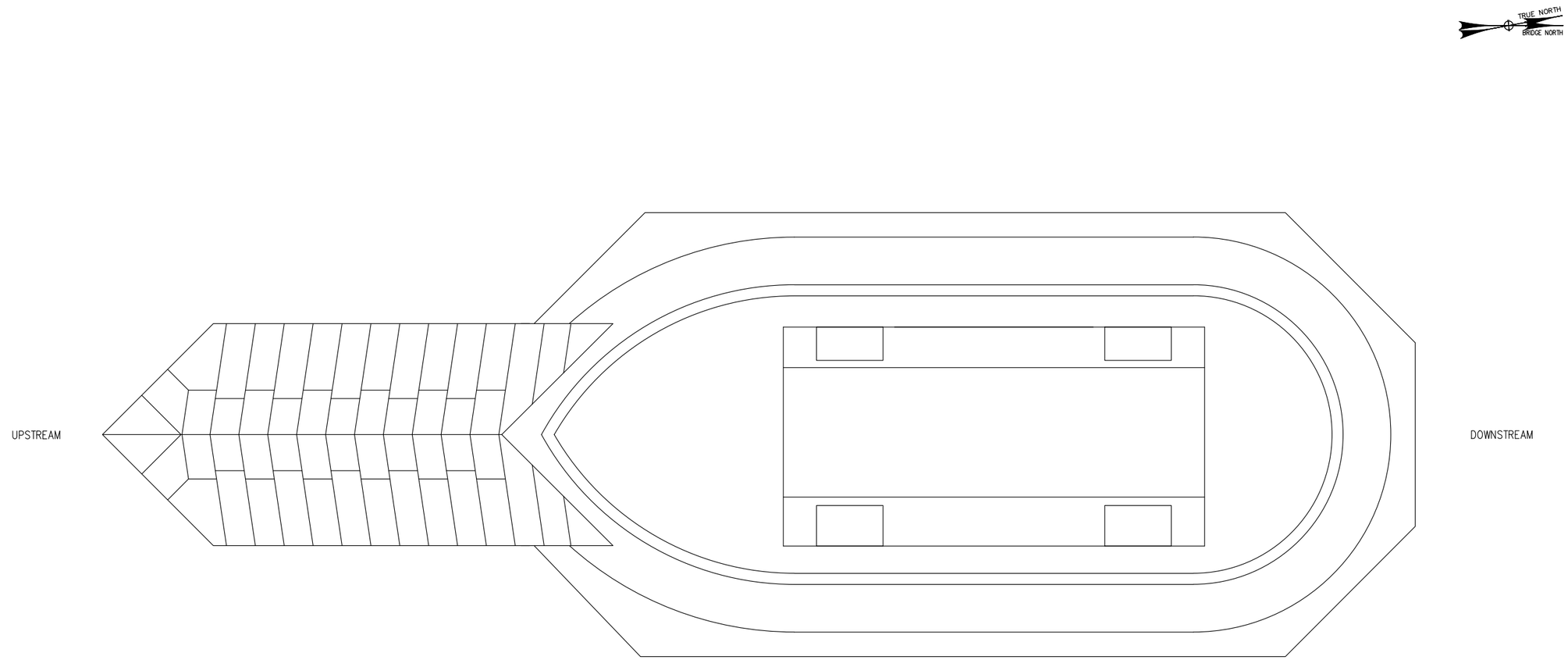

PIER 4 – PLAN

LEGEND

ITEM 600 – LIMITS OF CONCRETE REPAIR

CONCRETE SPALLS IDENTIFIED IN 2020 INSPECTION

ITEM 700 – CRACK REPAIR

8 0 8

SCALE: 3/32"=1'-0"

FILE NAME:

THESE DESIGN DOCUMENTS ARE PREPARED SOLELY FOR THE USE BY THE PARTY WITH WHOM THE DESIGN PROFESSIONAL HAS ENTERED INTO A CONTRACT AND THERE ARE NO REPRESENTATIONS OF ANY KIND MADE BY THE DESIGN PROFESSIONAL TO ANY PARTY WITH WHOM THE DESIGN PROFESSIONAL HAS NOT ENTERED INTO A CONTRACT

No.	Revisions	Date	By	No.	Revisions Cont.	Date	By

BUFFALO AND FORT ERIE PUBLIC BRIDGE AUTHORITY

BUFFALO AND FORT ERIE PUBLIC BRIDGE AUTHORITY
100 QUEEN STREET
FORT ERIE, ON L2A 3S6 CANADA

wsp
50 Lakefront Boulevard
Suite 111
Buffalo, NY 14202

STATE OF NEW YORK · SHIRI F. DONEGAN · 090913 · LICENSED PROFESSIONAL ENGINEER · 02/25/2021

BUFFALO AND FORT ERIE PUBLIC BRIDGE AUTHORITY GEC 2020-2023
BRIDGE PIER REHABILITATION

PIER 4 - PLAN

Designed: RLL | Drawn: KLW | Checked: SFD | Date: 01-22-2021

Project No: 30900145
WBS: 30900145
Sheet No. 25 OF 37
Dwg. No. S-114

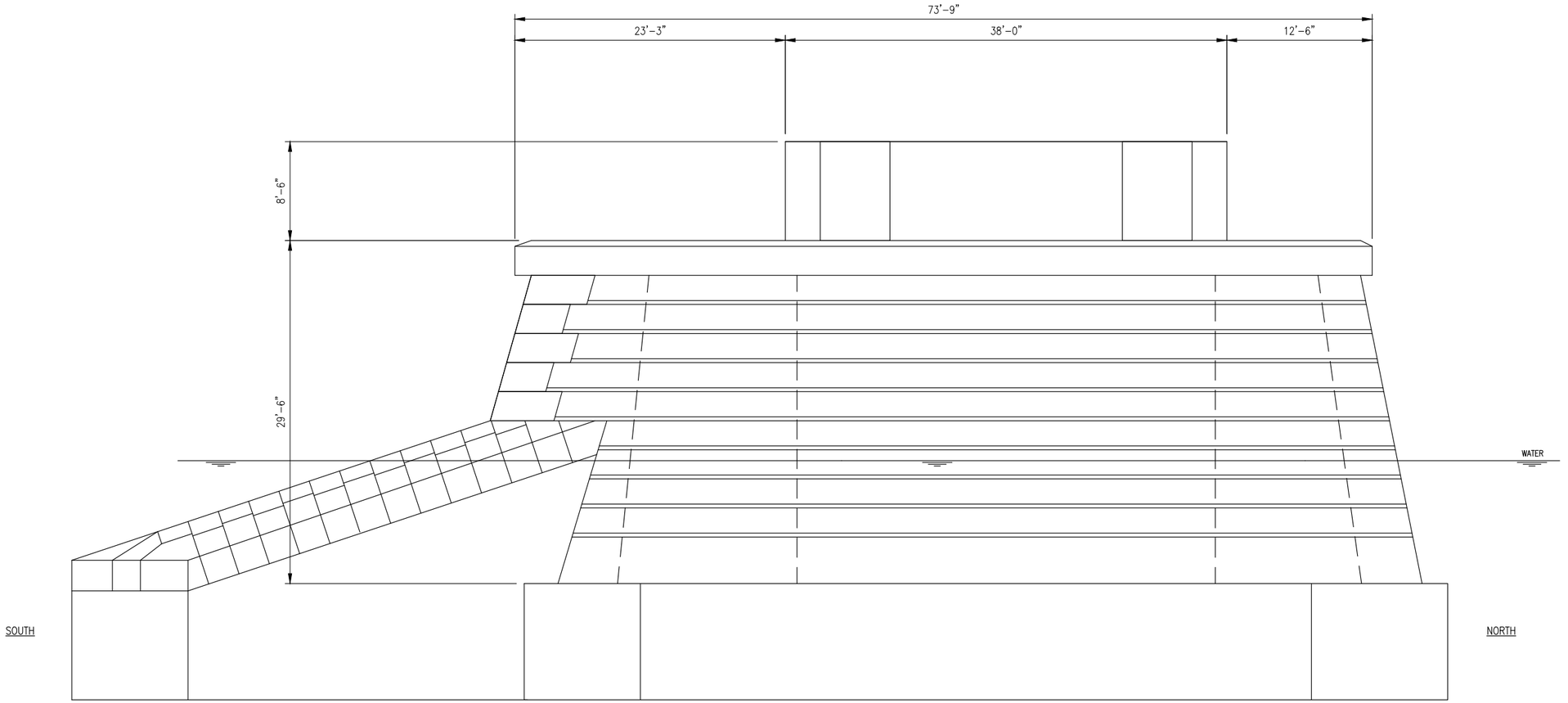

PIER 4 – EAST ELEVATION

LEGEND

ITEM 600 – LIMITS OF CONCRETE REPAIR

CONCRETE SPALLS IDENTIFIED IN 2020 INSPECTION

ITEM 700 – CRACK REPAIR

8 0 8

SCALE: 3/32"=1'-0"

FILE NAME:

THESE DESIGN DOCUMENTS ARE PREPARED SOLELY FOR THE USE BY THE PARTY WITH WHOM THE DESIGN PROFESSIONAL HAS ENTERED INTO A CONTRACT AND THERE ARE NO REPRESENTATIONS OF ANY KIND MADE BY THE DESIGN PROFESSIONAL TO ANY PARTY WITH WHOM THE DESIGN PROFESSIONAL HAS NOT ENTERED INTO A CONTRACT

No.	Revisions	Date	By	No.	Revisions Cont.	Date	By

BUFFALO AND FORT ERIE PUBLIC BRIDGE AUTHORITY

BUFFALO AND FORT ERIE PUBLIC BRIDGE AUTHORITY
100 QUEEN STREET
FORT ERIE, ON L2A 3S6 CANADA

wsp
50 Lakefront Boulevard
Suite 111
Buffalo, NY 14202

STATE OF NEW YORK · DAVID F. DONOVICH · 03615 · LICENSED PROFESSIONAL ENGINEER · 02/25/2021

BUFFALO AND FORT ERIE PUBLIC BRIDGE AUTHORITY GEC 2020-2023
BRIDGE PIER REHABILITATION

PIER 4 - EAST ELEVATION

Designed: RLL | Drawn: KLW | Checked: SFD | Date: 01-22-2021

Project No: 30900145
WBS: 30900145
Sheet No. 26 OF 37
Dwg. No. S-115

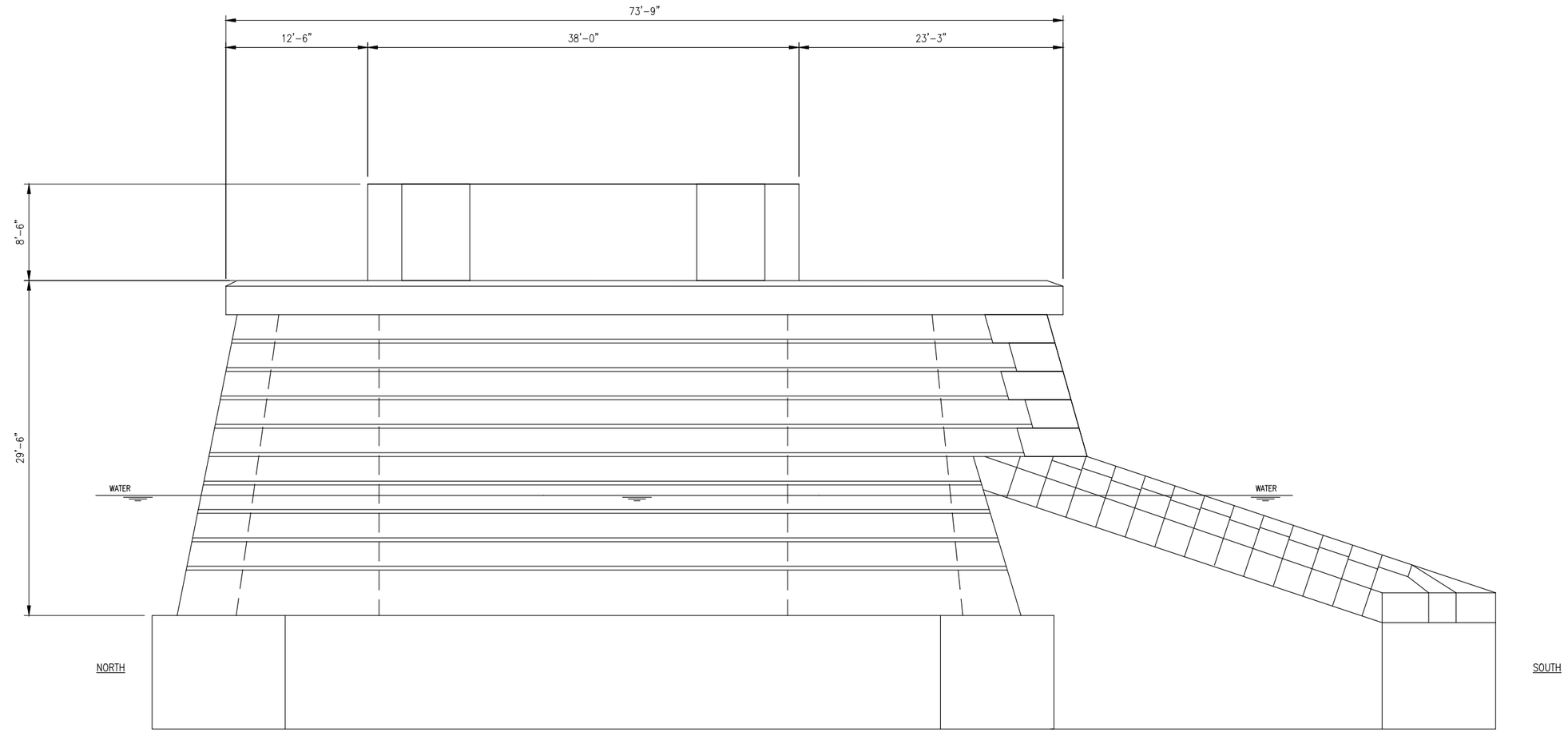

PIER 4 – WEST ELEVATION

LEGEND

ITEM 600 – LIMITS OF CONCRETE REPAIR

CONCRETE SPALLS IDENTIFIED IN 2020 INSPECTION

ITEM 700 – CRACK REPAIR

8 0 8

SCALE: 3/32" = 1'-0"

FILE NAME:

THESE DESIGN DOCUMENTS ARE PREPARED SOLELY FOR THE USE BY THE PARTY WITH WHOM THE DESIGN PROFESSIONAL HAS ENTERED INTO A CONTRACT AND THERE ARE NO REPRESENTATIONS OF ANY KIND MADE BY THE DESIGN PROFESSIONAL TO ANY PARTY WITH WHOM THE DESIGN PROFESSIONAL HAS NOT ENTERED INTO A CONTRACT

No.	Revisions	Date	By	No.	Revisions Cont.	Date	By

BUFFALO AND FORT ERIE PUBLIC BRIDGE AUTHORITY
100 QUEEN STREET
FORT ERIE, ON L2A 3S6 CANADA

wsp
50 Lakefront Boulevard
Suite 111
Buffalo, NY 14202

02/25/2021

BUFFALO AND FORT ERIE PUBLIC BRIDGE AUTHORITY GEC 2020-2023
BRIDGE PIER REHABILITATION

PIER 4 - WEST ELEVATION

Designed: RLL | Drawn: KLW | Checked: SFD | Date: 01-22-2021

Project No: 30900145
WBS: 30900145
Sheet No. 27 OF 37
Dwg. No. S-116

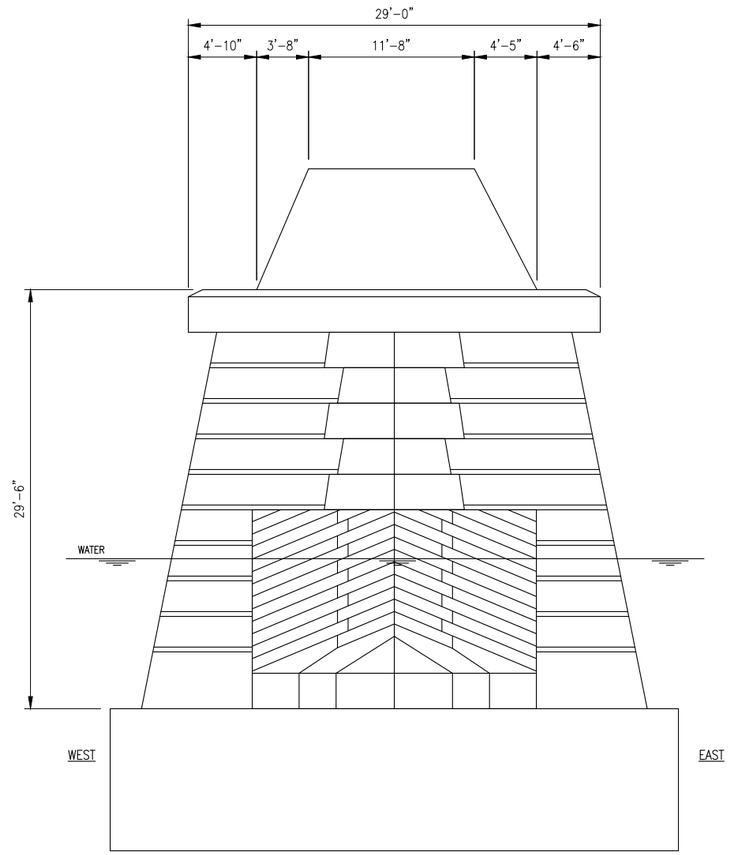

PIER 4 – SOUTH ELEVATION

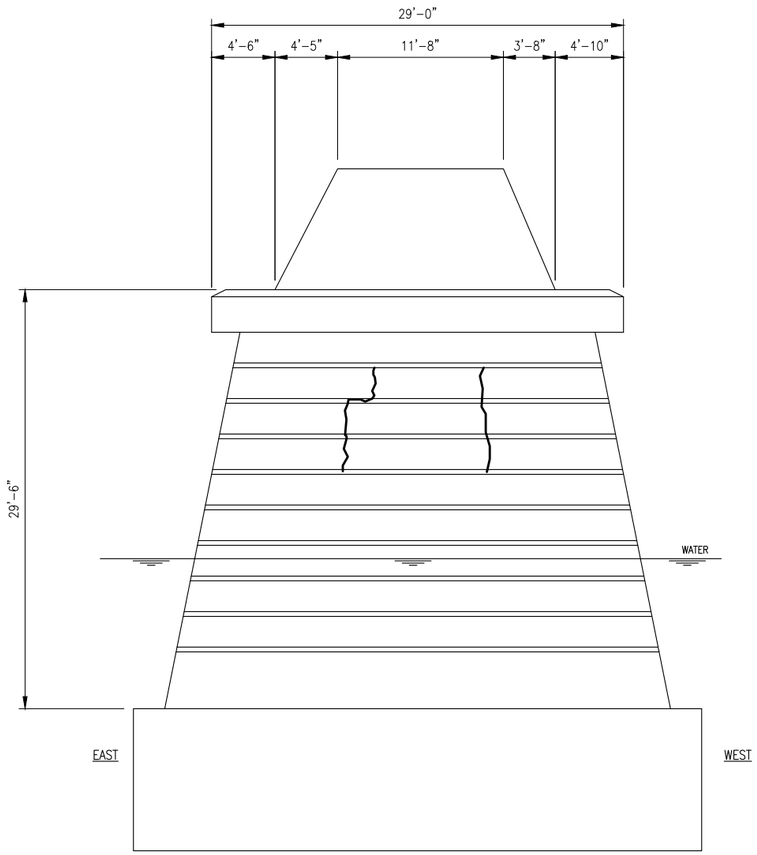

PIER 4 – NORTH ELEVATION

CRACK REPAIR QUANTITIES	
FACE	QUANTITIES [LF]
SOUTH	–
NORTH	20

LEGEND

ITEM 700 – CRACK REPAIR

8 0 8

SCALE: 3/32"=1'-0"

FILE NAME:

THESE DESIGN DOCUMENTS ARE PREPARED SOLELY FOR THE USE BY THE PARTY WITH WHOM THE DESIGN PROFESSIONAL HAS ENTERED INTO A CONTRACT AND THERE ARE NO REPRESENTATIONS OF ANY KIND MADE BY THE DESIGN PROFESSIONAL TO ANY PARTY WITH WHOM THE DESIGN PROFESSIONAL HAS NOT ENTERED INTO A CONTRACT

No.	Revisions	Date	By	No.	Revisions Cont.	Date	By

BUFFALO AND FORT ERIE PUBLIC BRIDGE AUTHORITY
BUFFALO AND FORT ERIE PUBLIC BRIDGE AUTHORITY
100 QUEEN STREET
FORT ERIE, ON L2A 3S6 CANADA

50 Lakefront Boulevard
Suite 111
Buffalo, NY 14202

BUFFALO AND FORT ERIE PUBLIC BRIDGE AUTHORITY GEC 2020-2023
BRIDGE PIER REHABILITATION

PIER 4 - NORTH & SOUTH ELEVATIONS

Designed: RLL | Drawn: KLW | Checked: SFD | Date: 01-22-2021

Project No: 30900145
WBS: 30900145
Sheet No. 28 OF 37
Dwg. No. S-117

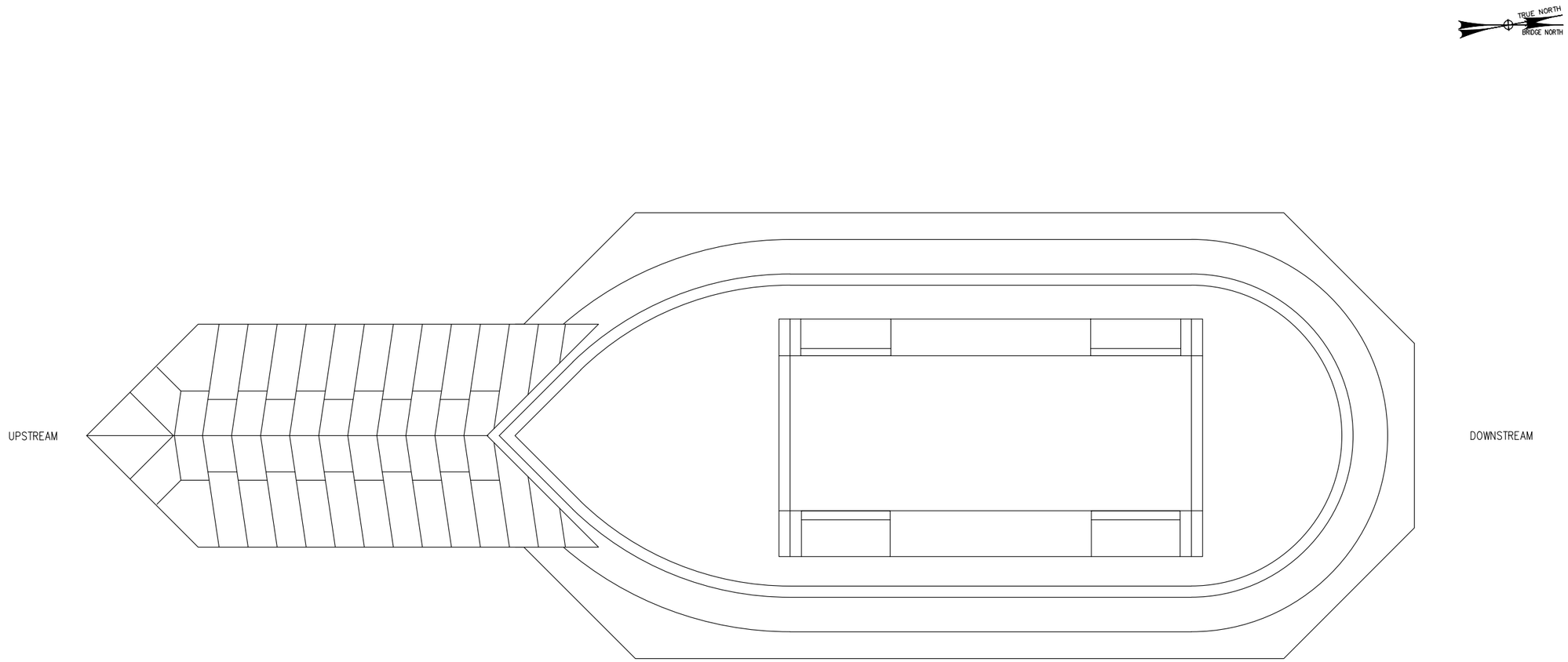

PIER 5 – PLAN

LEGEND

ITEM 600 – LIMITS OF CONCRETE REPAIR

CONCRETE SPALLS IDENTIFIED IN 2020 INSPECTION

ITEM 700 – CRACK REPAIR

8 0 8

SCALE: 3/32"=1'-0"

FILE NAME:

THESE DESIGN DOCUMENTS ARE PREPARED SOLELY FOR THE USE BY THE PARTY WITH WHOM THE DESIGN PROFESSIONAL HAS ENTERED INTO A CONTRACT AND THERE ARE NO REPRESENTATIONS OF ANY KIND MADE BY THE DESIGN PROFESSIONAL TO ANY PARTY WITH WHOM THE DESIGN PROFESSIONAL HAS NOT ENTERED INTO A CONTRACT

No.	Revisions	Date	By	No.	Revisions Cont.	Date	By

BUFFALO AND FORT ERIE PUBLIC BRIDGE AUTHORITY

BUFFALO AND FORT ERIE PUBLIC BRIDGE AUTHORITY
100 QUEEN STREET
FORT ERIE, ON L2A 3S6 CANADA

wsp
50 Lakefront Boulevard
Suite 111
Buffalo, NY 14202

STATE OF NEW YORK
K. J. YUSEK
100179098
LICENSED PROFESSIONAL ENGINEER
02/25/2021

BUFFALO AND FORT ERIE PUBLIC BRIDGE AUTHORITY GEC 2020-2023
BRIDGE PIER REHABILITATION

PIER 5 - PLAN

Designed: RLL | Drawn: KLW | Checked: SFD | Date: 01-22-2021

Project No: 30900145
WBS: 30900145
Sheet No. 29 OF 37
Dwg. No. S-118

CRACK REPAIR QUANTITIES	
FACE	QUANTITIES [LF]
EAST	25

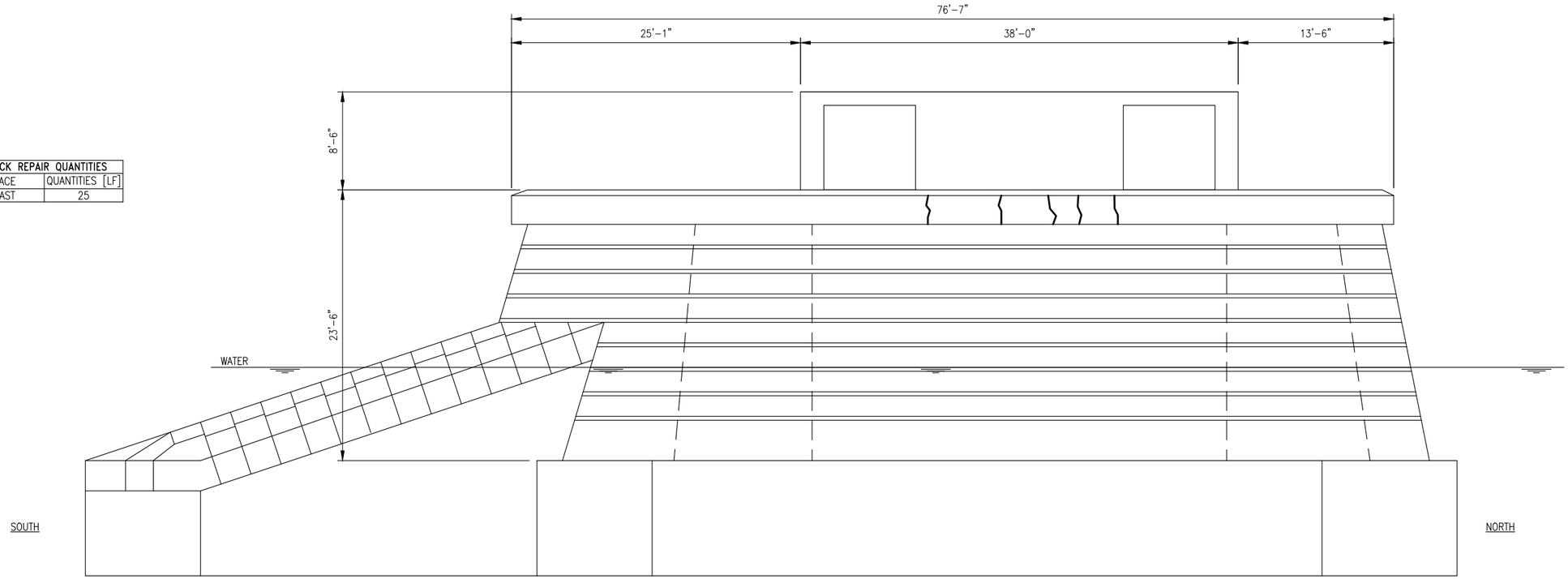

PIER 5 – EAST ELEVATION

LEGEND

ITEM 600 – LIMITS OF CONCRETE REPAIR

CONCRETE SPALLS IDENTIFIED IN 2020 INSPECTION

ITEM 700 – CRACK REPAIR

8 0 8

SCALE: 3/32"=1'-0"

FILE NAME:

THESE DESIGN DOCUMENTS ARE PREPARED SOLELY FOR THE USE BY THE PARTY WITH WHOM THE DESIGN PROFESSIONAL HAS ENTERED INTO A CONTRACT AND THERE ARE NO REPRESENTATIONS OF ANY KIND MADE BY THE DESIGN PROFESSIONAL TO ANY PARTY WITH WHOM THE DESIGN PROFESSIONAL HAS NOT ENTERED INTO A CONTRACT

No.	Revisions	Date	By	No.	Revisions Cont.	Date	By

BUFFALO AND FORT ERIE PUBLIC BRIDGE AUTHORITY

BUFFALO AND FORT ERIE PUBLIC BRIDGE AUTHORITY
100 QUEEN STREET
FORT ERIE, ON L2A 3S6 CANADA

wsp
50 Lakefront Boulevard
Suite 111
Buffalo, NY 14202

BUFFALO AND FORT ERIE PUBLIC BRIDGE AUTHORITY GEC 2020-2023
BRIDGE PIER REHABILITATION

PIER 5 - EAST ELEVATION

Designed: RLL | Drawn: KLW | Checked: SFD | Date: 01-22-2021

Project No: 30900145
WBS: 30900145
Sheet No. 30 OF 37
Dwg. No. S-119

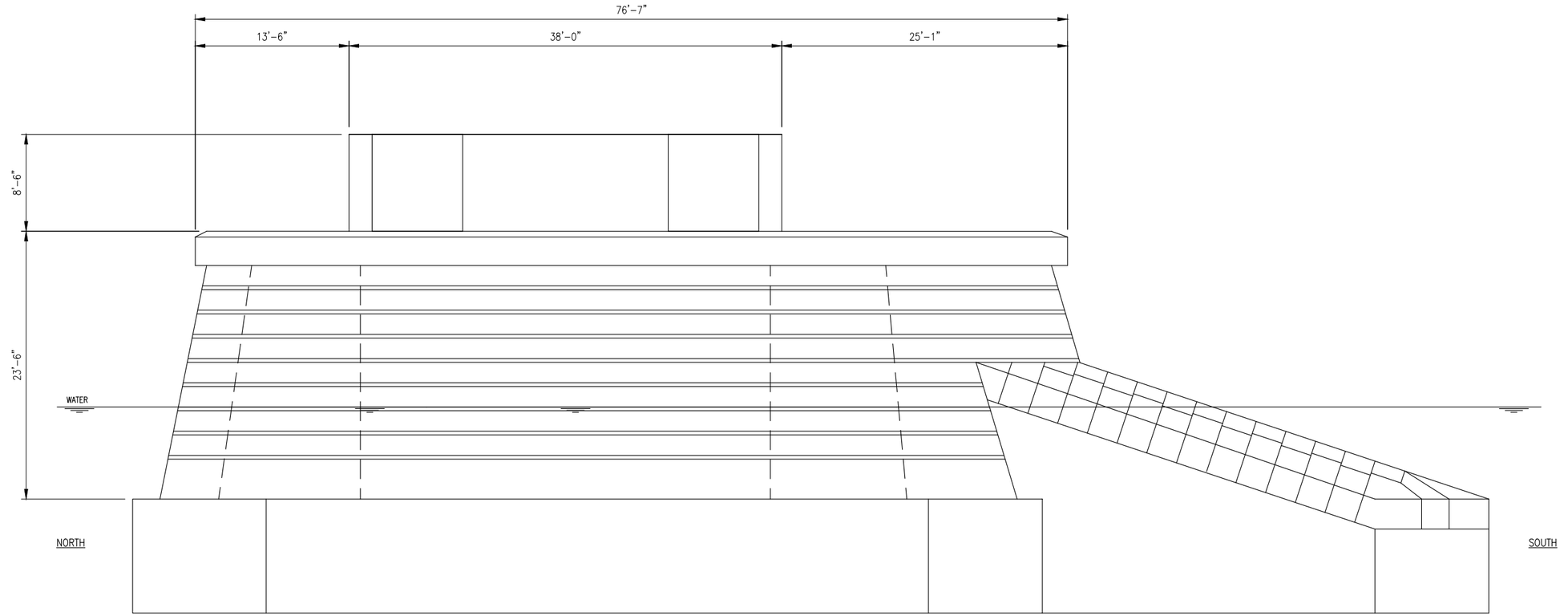

PIER 5 – WEST ELEVATION

LEGEND

ITEM 600 – LIMITS OF CONCRETE REPAIR

CONCRETE SPALLS IDENTIFIED IN 2020 INSPECTION

ITEM 700 – CRACK REPAIR

8 0 8

SCALE: 3/32" = 1'-0"

FILE NAME:

THESE DESIGN DOCUMENTS ARE PREPARED SOLELY FOR THE USE BY THE PARTY WITH WHOM THE DESIGN PROFESSIONAL HAS ENTERED INTO A CONTRACT AND THERE ARE NO REPRESENTATIONS OF ANY KIND MADE BY THE DESIGN PROFESSIONAL TO ANY PARTY WITH WHOM THE DESIGN PROFESSIONAL HAS NOT ENTERED INTO A CONTRACT

No.	Revisions	Date	By	No.	Revisions Cont.	Date	By

BUFFALO AND FORT ERIE PUBLIC BRIDGE AUTHORITY
BUFFALO AND FORT ERIE PUBLIC BRIDGE AUTHORITY
100 QUEEN STREET
FORT ERIE, ON L2A 3S6 CANADA

wsp
50 Lakefront Boulevard
Suite 111
Buffalo, NY 14202

02/25/2021

BUFFALO AND FORT ERIE PUBLIC BRIDGE AUTHORITY GEC 2020-2023
BRIDGE PIER REHABILITATION

PIER 5 - WEST ELEVATION

Designed: RLL | Drawn: KLW | Checked: SFD | Date: 01-22-2021

Project No: 30900145
WBS: 30900145
Sheet No. 31 OF 37
Dwg. No. S-120

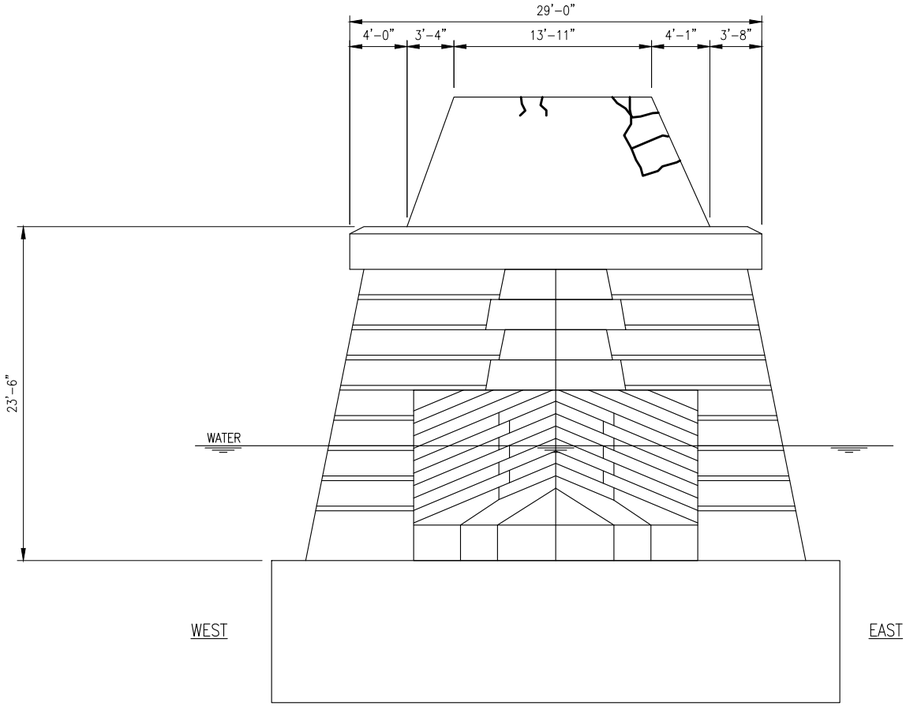

PIER 5 – SOUTH ELEVATION

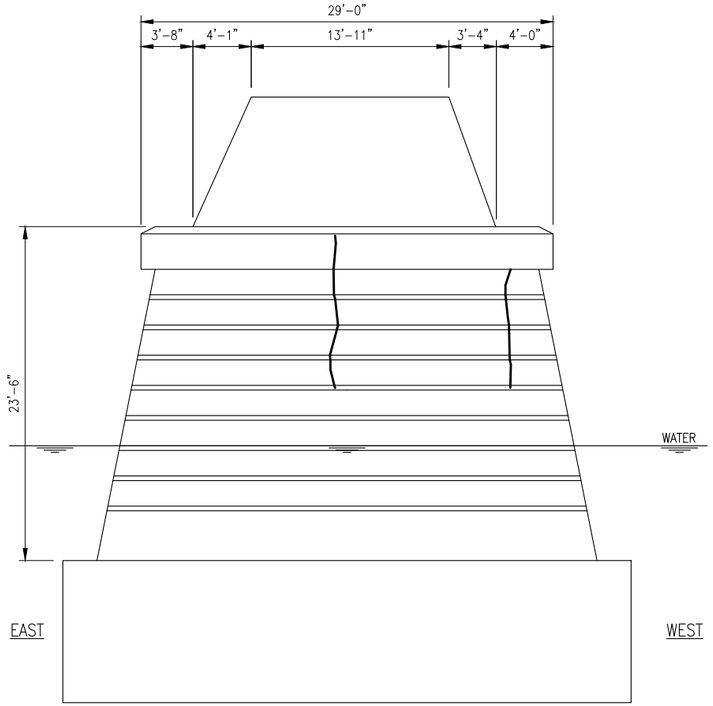

PIER 5 – NORTH ELEVATION

CRACK REPAIR QUANTITIES	
FACE	QUANTITIES [LF]
SOUTH	30
NORTH	30

LEGEND

- ITEM 600 – LIMITS OF CONCRETE REPAIR
- CONCRETE SPALLS IDENTIFIED IN 2020 INSPECTION
- ITEM 700 – CRACK REPAIR

8 0 8

SCALE: 3/32"=1'-0"

THESE DESIGN DOCUMENTS ARE PREPARED SOLELY FOR THE USE BY THE PARTY WITH WHOM THE DESIGN PROFESSIONAL HAS ENTERED INTO A CONTRACT AND THERE ARE NO REPRESENTATIONS OF ANY KIND MADE BY THE DESIGN PROFESSIONAL TO ANY PARTY WITH WHOM THE DESIGN PROFESSIONAL HAS NOT ENTERED INTO A CONTRACT

FILE NAME:

No.	Revisions	Date	By	No.	Revisions Cont.	Date	By

BUFFALO AND FORT ERIE PUBLIC BRIDGE AUTHORITY
BUFFALO AND FORT ERIE PUBLIC BRIDGE AUTHORITY
100 QUEEN STREET
FORT ERIE, ON L2A 3S6 CANADA

wsp
50 Lakefront Boulevard
Suite 111
Buffalo, NY 14202

BUFFALO AND FORT ERIE PUBLIC BRIDGE AUTHORITY GEC 2020-2023
BRIDGE PIER REHABILITATION

PIER 5 - NORTH & SOUTH ELEVATIONS

Designed: RLL | Drawn: KLW | Checked: SFD | Date: 01-22-2021

Project No: 30900145
WBS: 30900145
Sheet No. 32 OF 37
Dwg. No. S-121

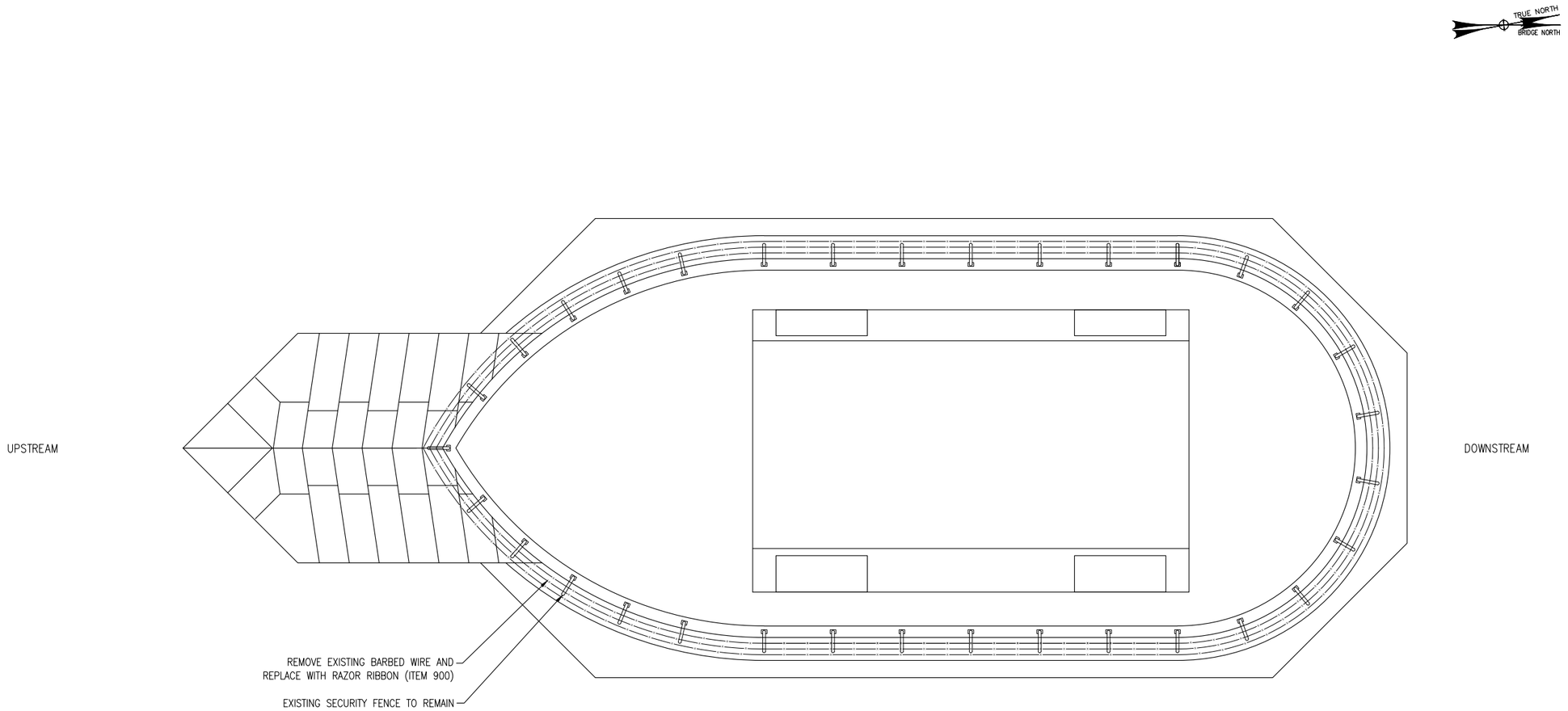

PIER 6 – PLAN

LEGEND

- ITEM 600 – LIMITS OF CONCRETE REPAIR
- CONCRETE SPALLS IDENTIFIED IN 2020 INSPECTION
- ITEM 700 – CRACK REPAIR

NOTE:

COSTS FOR REMOVAL AND REPLACEMENT OF SECTIONS OF EXISTING FENCING TO FACILITATE CONCRETE REPAIRS SHALL BE INCLUDED IN THE PRICE BID FOR ITEM 900– REMOVAL AND REPLACEMENT OF ACCESS CONTROL DEVICES

8 0 8

SCALE: 3/32" = 1'-0"

THESE DESIGN DOCUMENTS ARE PREPARED SOLELY FOR THE USE BY THE PARTY WITH WHOM THE DESIGN PROFESSIONAL HAS ENTERED INTO A CONTRACT AND THERE ARE NO REPRESENTATIONS OF ANY KIND MADE BY THE DESIGN PROFESSIONAL TO ANY PARTY WITH WHOM THE DESIGN PROFESSIONAL HAS NOT ENTERED INTO A CONTRACT

FILE NAME:

No.	Revisions	Date	By

No.	Revisions Cont.	Date	By

BUFFALO AND FORT ERIE PUBLIC BRIDGE AUTHORITY
BUFFALO AND FORT ERIE PUBLIC BRIDGE AUTHORITY
100 QUEEN STREET
FORT ERIE, ON L2A 3S6 CANADA

wsp
50 Lakefront Boulevard
Suite 111
Buffalo, NY 14202

K. J. YUSEK 100179098 PROFESSIONAL ENGINEER PROVINCE OF ONTARIO — 03/25/2021

BUFFALO AND FORT ERIE PUBLIC BRIDGE AUTHORITY GEC 2020-2023
BRIDGE PIER REHABILITATION

PIER 6 - PLAN

Designed: RLL | Drawn: KLW | Checked: SFD | Date: 01-22-2021

Project No:	30900145
WBS:	30900145
Sheet No.	33 OF 37
Dwg. No.	S-122

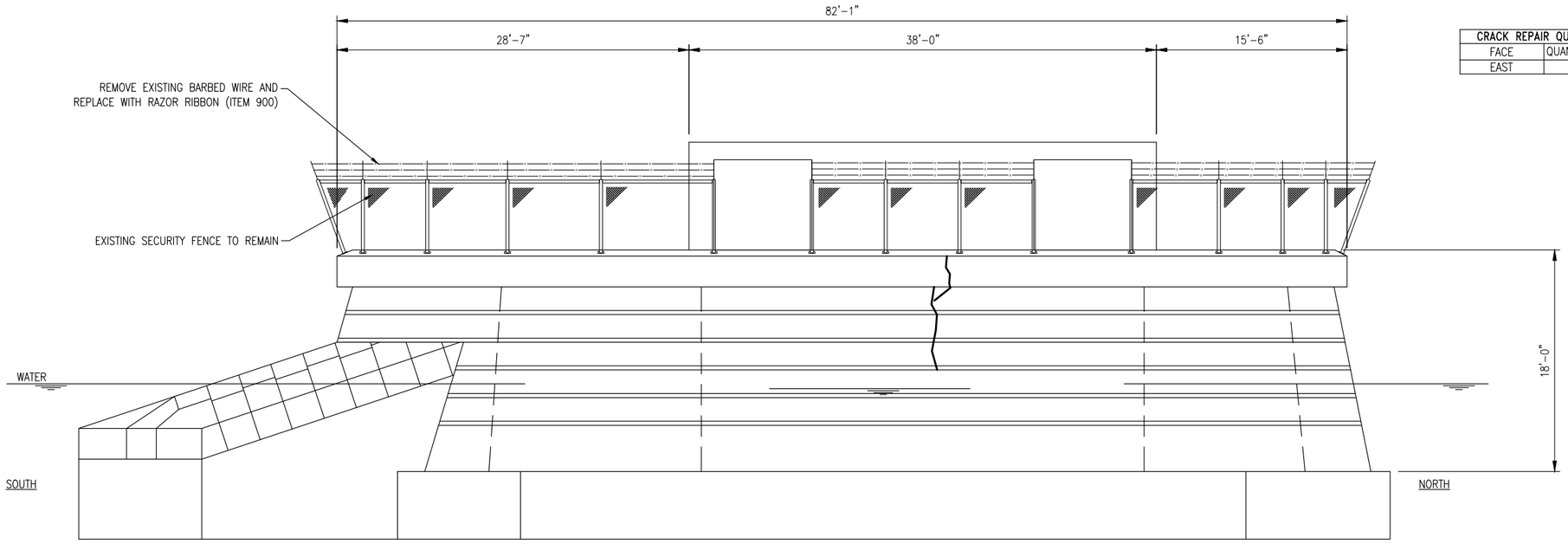

CRACK REPAIR QUANTITIES	
FACE	QUANTITIES [LF]
EAST	15

PIER 6 – EAST ELEVATION

LEGEND

- ITEM 600 – LIMITS OF CONCRETE REPAIR
- CONCRETE SPALLS IDENTIFIED IN 2020 INSPECTION
- ITEM 700 – CRACK REPAIR

NOTE:

COSTS FOR REMOVAL AND REPLACEMENT OF SECTIONS OF EXISTING FENCING TO FACILITATE CONCRETE REPAIRS SHALL BE INCLUDED IN THE PRICE BID FOR ITEM 900– REMOVAL AND REPLACEMENT OF ACCESS CONTROL DEVICES

8 0 8

SCALE: 3/32"=1'-0"

FILE NAME:

THESE DESIGN DOCUMENTS ARE PREPARED SOLELY FOR THE USE BY THE PARTY WITH WHOM THE DESIGN PROFESSIONAL HAS ENTERED INTO A CONTRACT AND THERE ARE NO REPRESENTATIONS OF ANY KIND MADE BY THE DESIGN PROFESSIONAL TO ANY PARTY WITH WHOM THE DESIGN PROFESSIONAL HAS NOT ENTERED INTO A CONTRACT

No.	Revisions	Date	By

No.	Revisions Cont.	Date	By

BUFFALO AND FORT ERIE PUBLIC BRIDGE AUTHORITY
BUFFALO AND FORT ERIE PUBLIC BRIDGE AUTHORITY
100 QUEEN STREET
FORT ERIE, ON L2A 3S6 CANADA

wsp
50 Lakefront Boulevard
Suite 111
Buffalo, NY 14202

BUFFALO AND FORT ERIE PUBLIC BRIDGE AUTHORITY GEC 2020-2023
BRIDGE PIER REHABILITATION

PIER 6 - EAST ELEVATION

Designed: RLL | Drawn: KLW | Checked: SFD | Date: 01-22-2021

Project No: 30900145
WBS: 30900145
Sheet No. 34 OF 37
Dwg. No. S-123

CRACK REPAIR QUANTITIES	
FACE	QUANTITIES [LF]
WEST	10

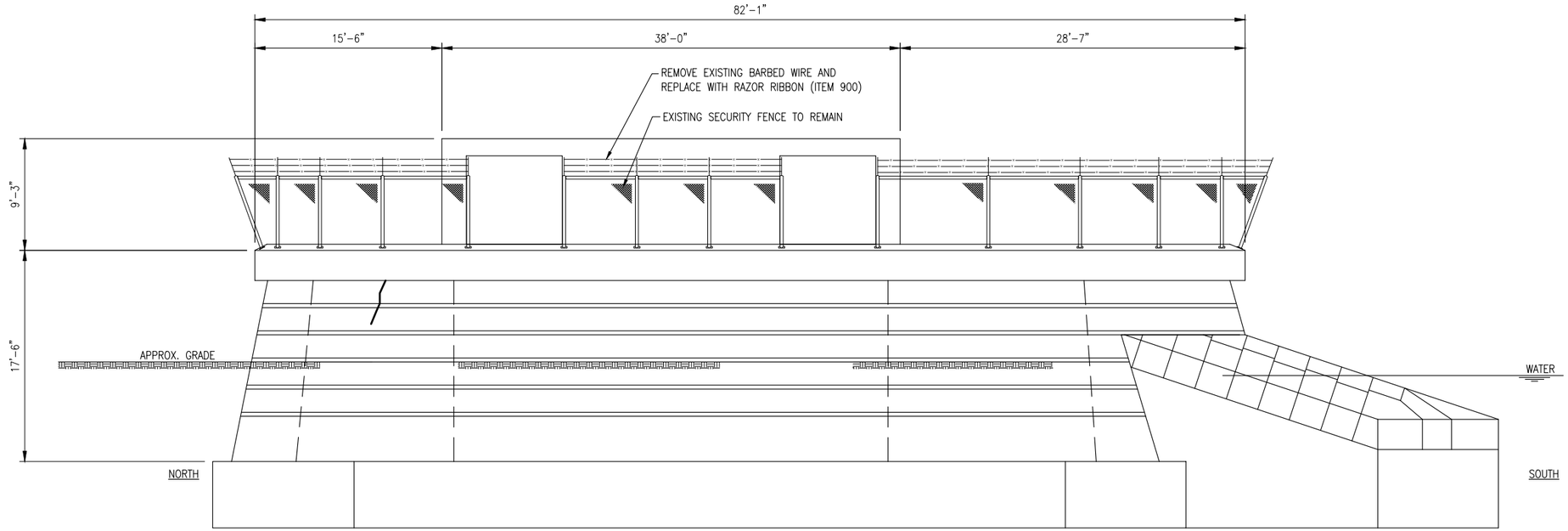

PIER 6 – WEST ELEVATION

LEGEND

ITEM 600 – LIMITS OF CONCRETE REPAIR

CONCRETE SPALLS IDENTIFIED IN 2020 INSPECTION

ITEM 700 – CRACK REPAIR

NOTE:

COSTS FOR REMOVAL AND REPLACEMENT OF SECTIONS OF EXISTING FENCING TO FACILITATE CONCRETE REPAIRS SHALL BE INCLUDED IN THE PRICE BID FOR ITEM 900– REMOVAL AND REPLACEMENT OF ACCESS CONTROL DEVICES

8 0 8

SCALE: 3/32" = 1'-0"

FILE NAME:

THESE DESIGN DOCUMENTS ARE PREPARED SOLELY FOR THE USE BY THE PARTY WITH WHOM THE DESIGN PROFESSIONAL HAS ENTERED INTO A CONTRACT AND THERE ARE NO REPRESENTATIONS OF ANY KIND MADE BY THE DESIGN PROFESSIONAL TO ANY PARTY WITH WHOM THE DESIGN PROFESSIONAL HAS NOT ENTERED INTO A CONTRACT

No.	Revisions	Date	By

No.	Revisions Cont.	Date	By

BUFFALO AND FORT ERIE PUBLIC BRIDGE AUTHORITY
BUFFALO AND FORT ERIE PUBLIC BRIDGE AUTHORITY
100 QUEEN STREET
FORT ERIE, ON L2A 3S6 CANADA

wsp
50 Lakefront Boulevard
Suite 111
Buffalo, NY 14202

02/25/2021

BUFFALO AND FORT ERIE PUBLIC BRIDGE AUTHORITY GEC 2020-2023
BRIDGE PIER REHABILITATION

PIER 6 - WEST ELEVATION

Designed: RLL | Drawn: KLW | Checked: SFD | Date: 01-22-2021

Project No:	30900145
WBS:	30900145
Sheet No.	35 OF 37
Dwg. No.	S-124

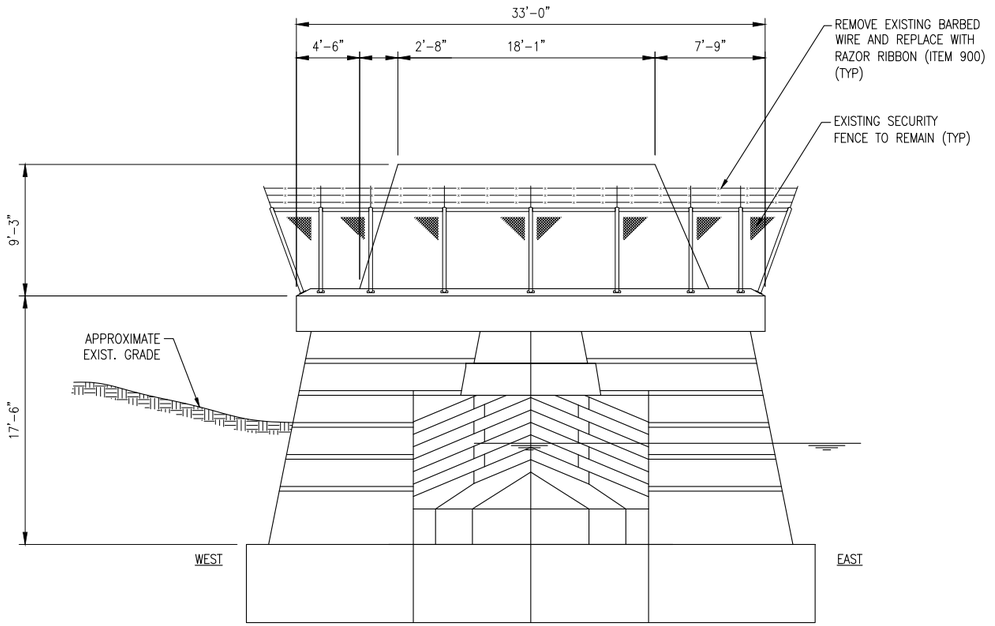

PIER 6 – SOUTH ELEVATION

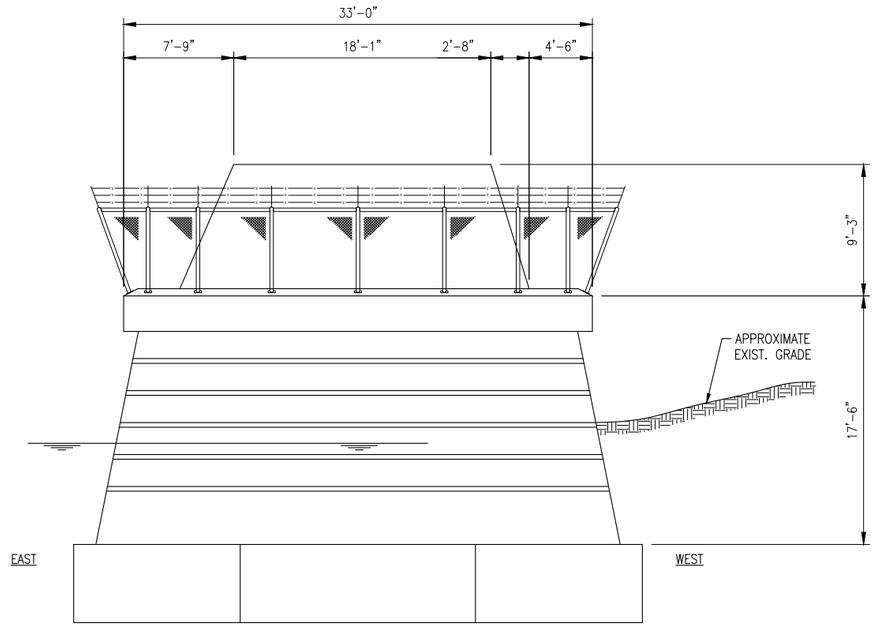

PIER 6 – NORTH ELEVATION

LEGEND

- ITEM 600 – LIMITS OF CONCRETE REPAIR
- CONCRETE SPALLS IDENTIFIED IN 2020 INSPECTION
- ITEM 700 – CRACK REPAIR

NOTE:

COSTS FOR REMOVAL AND REPLACEMENT OF SECTIONS OF EXISTING FENCING TO FACILITATE CONCRETE REPAIRS SHALL BE INCLUDED IN THE PRICE BID FOR ITEM 900– REMOVAL AND REPLACEMENT OF ACCESS CONTROL DEVICES

8 0 8

SCALE: 3/32" = 1'-0"

FILE NAME:

THESE DESIGN DOCUMENTS ARE PREPARED SOLELY FOR THE USE BY THE PARTY WITH WHOM THE DESIGN PROFESSIONAL HAS ENTERED INTO A CONTRACT AND THERE ARE NO REPRESENTATIONS OF ANY KIND MADE BY THE DESIGN PROFESSIONAL TO ANY PARTY WITH WHOM THE DESIGN PROFESSIONAL HAS NOT ENTERED INTO A CONTRACT

No.	Revisions	Date	By	No.	Revisions Cont.	Date	By

BUFFALO AND FORT ERIE PUBLIC BRIDGE AUTHORITY

BUFFALO AND FORT ERIE PUBLIC BRIDGE AUTHORITY
100 QUEEN STREET
FORT ERIE, ON L2A 3S6 CANADA

wsp
50 Lakefront Boulevard
Suite 111
Buffalo, NY 14202

BUFFALO AND FORT ERIE PUBLIC BRIDGE AUTHORITY GEC 2020-2023
BRIDGE PIER REHABILITATION

PIER 6 - NORTH & SOUTH ELEVATIONS

Designed:	RLL	Drawn:	KLW	Checked:	SFD	Date:	01-22-2021

Project No:	30900145
WBS:	30900145
Sheet No.	36 OF 37
Dwg. No.	S-125

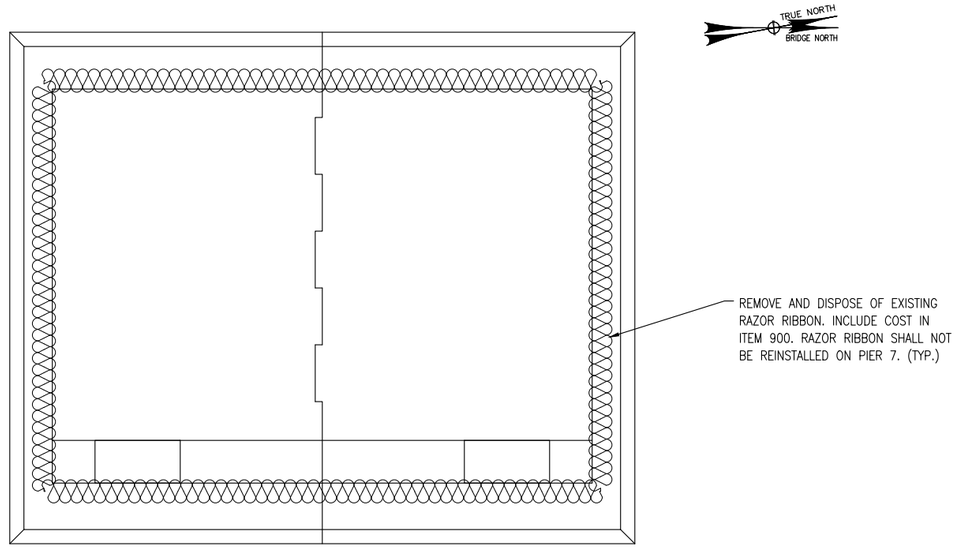

PIER 7 – PLAN

LEGEND

- ITEM 600 – LIMITS OF CONCRETE REPAIR
- CONCRETE SPALLS IDENTIFIED IN 2020 INSPECTION
- ITEM 700 – CRACK REPAIR

CRACK REPAIR QUANTITIES	
FACE	QUANTITIES [LF]
WEST	15

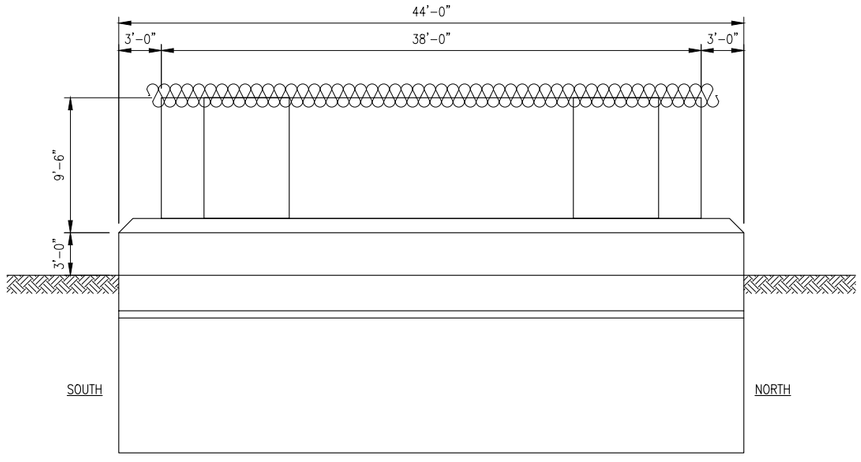

PIER 7 – EAST ELEVATION

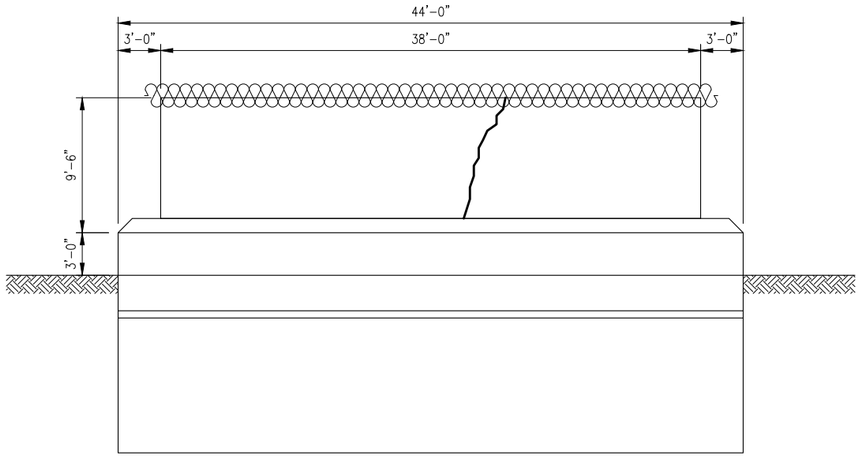

PIER 7 – WEST ELEVATION

8 0 8

SCALE: 3/32"=1'-0"

FILE NAME:

THESE DESIGN DOCUMENTS ARE PREPARED SOLELY FOR THE USE BY THE PARTY WITH WHOM THE DESIGN PROFESSIONAL HAS ENTERED INTO A CONTRACT AND THERE ARE NO REPRESENTATIONS OF ANY KIND MADE BY THE DESIGN PROFESSIONAL TO ANY PARTY WITH WHOM THE DESIGN PROFESSIONAL HAS NOT ENTERED INTO A CONTRACT

No.	Revisions	Date	By	No.	Revisions Cont.	Date	By

BUFFALO AND FORT ERIE PUBLIC BRIDGE AUTHORITY

BUFFALO AND FORT ERIE PUBLIC BRIDGE AUTHORITY
100 QUEEN STREET
FORT ERIE, ON L2A 3S6 CANADA

wsp
50 Lakefront Boulevard
Suite 111
Buffalo, NY 14202

BUFFALO AND FORT ERIE PUBLIC BRIDGE AUTHORITY GEC 2020-2023
BRIDGE PIER REHABILITATION

PIER 7 - PLAN, EAST & WEST ELEVATION

Designed: RLL | Drawn: KLW | Checked: SFD | Date: 01-22-2021

Project No: 30900145
WBS: 30900145
Sheet No. 37 OF 37
Dwg. No. S-126

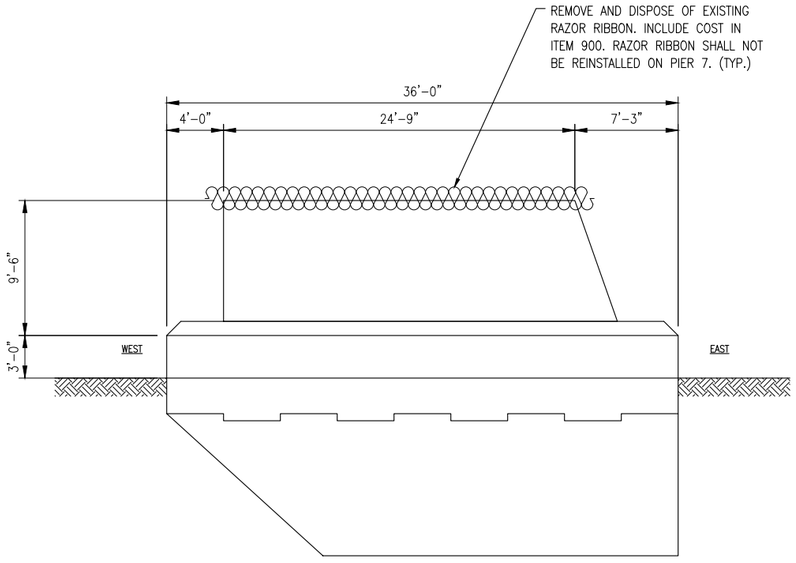

PIER 7 – SOUTH ELEVATION

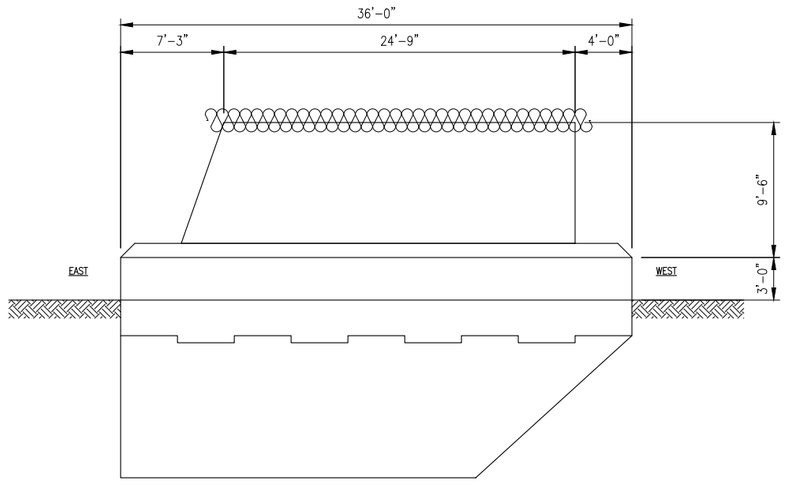

PIER 7 – NORTH ELEVATION

LEGEND

ITEM 600 – LIMITS OF CONCRETE REPAIR

CONCRETE SPALLS IDENTIFIED IN 2020 INSPECTION

ITEM 700 – CRACK REPAIR

8 0 8

SCALE: 3/32"=1'-0"

FILE NAME:

THESE DESIGN DOCUMENTS ARE PREPARED SOLELY FOR THE USE BY THE PARTY WITH WHOM THE DESIGN PROFESSIONAL HAS ENTERED INTO A CONTRACT AND THERE ARE NO REPRESENTATIONS OF ANY KIND MADE BY THE DESIGN PROFESSIONAL TO ANY PARTY WITH WHOM THE DESIGN PROFESSIONAL HAS NOT ENTERED INTO A CONTRACT

No.	Revisions	Date	By	No.	Revisions Cont.	Date	By

BUFFALO AND FORT ERIE PUBLIC BRIDGE AUTHORITY

BUFFALO AND FORT ERIE PUBLIC BRIDGE AUTHORITY
100 QUEEN STREET
FORT ERIE, ON L2A 3S6 CANADA

wsp
50 Lakefront Boulevard
Suite 111
Buffalo, NY 14202

BUFFALO AND FORT ERIE PUBLIC BRIDGE AUTHORITY GEC 2020-2023
BRIDGE PIER REHABILITATION

PIER 7 - NORTH & SOUTH ELEVATIONS

Designed: RLL | Drawn: KLW | Checked: SFD | Date: 01-22-2021

Project No: 30900145
WBS: 30900145
Sheet No. 37 OF 37
Dwg. No. S-127